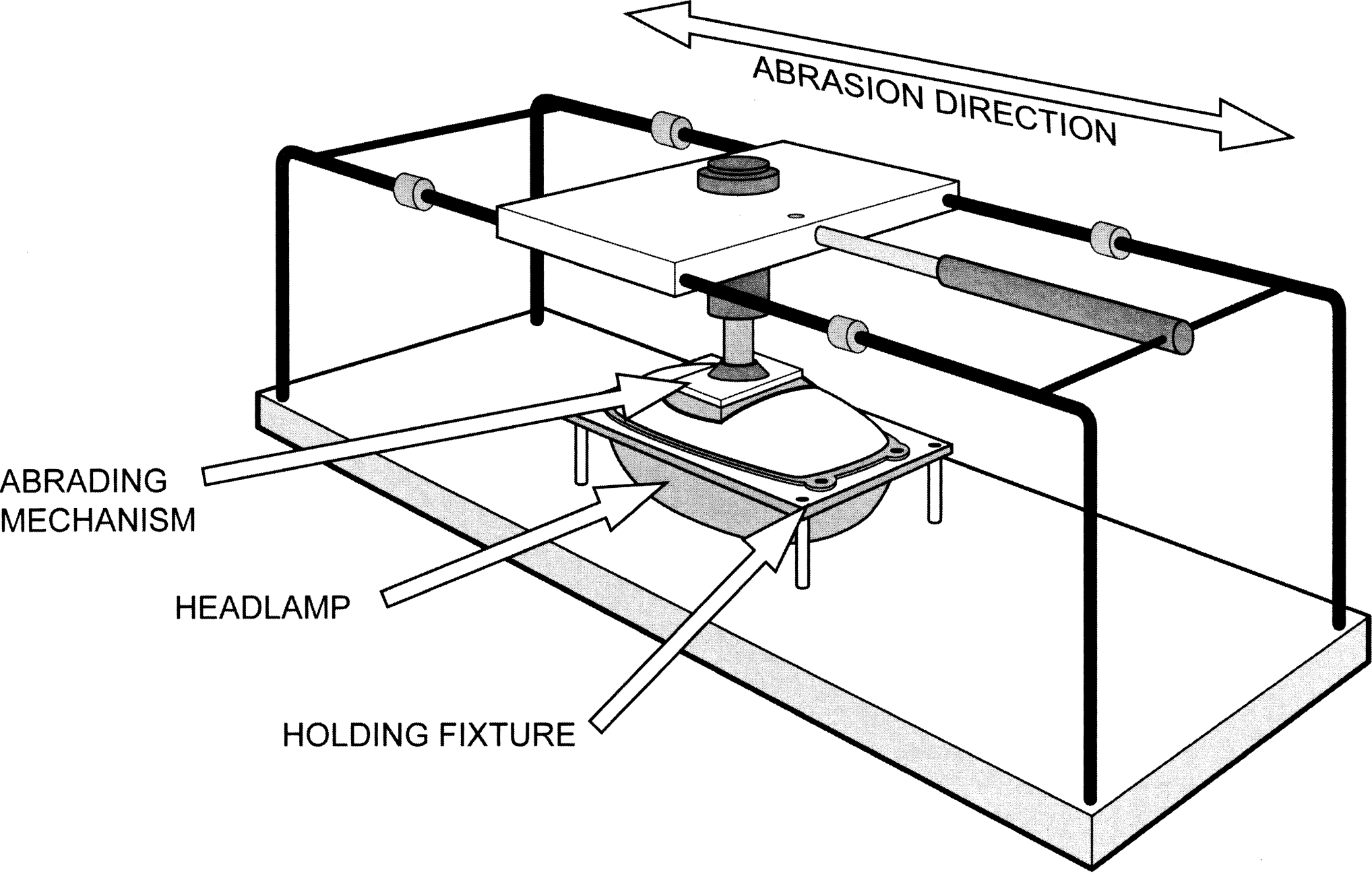

HEADLAMP ABRASION TEST FIXTURE

FIGURE 5