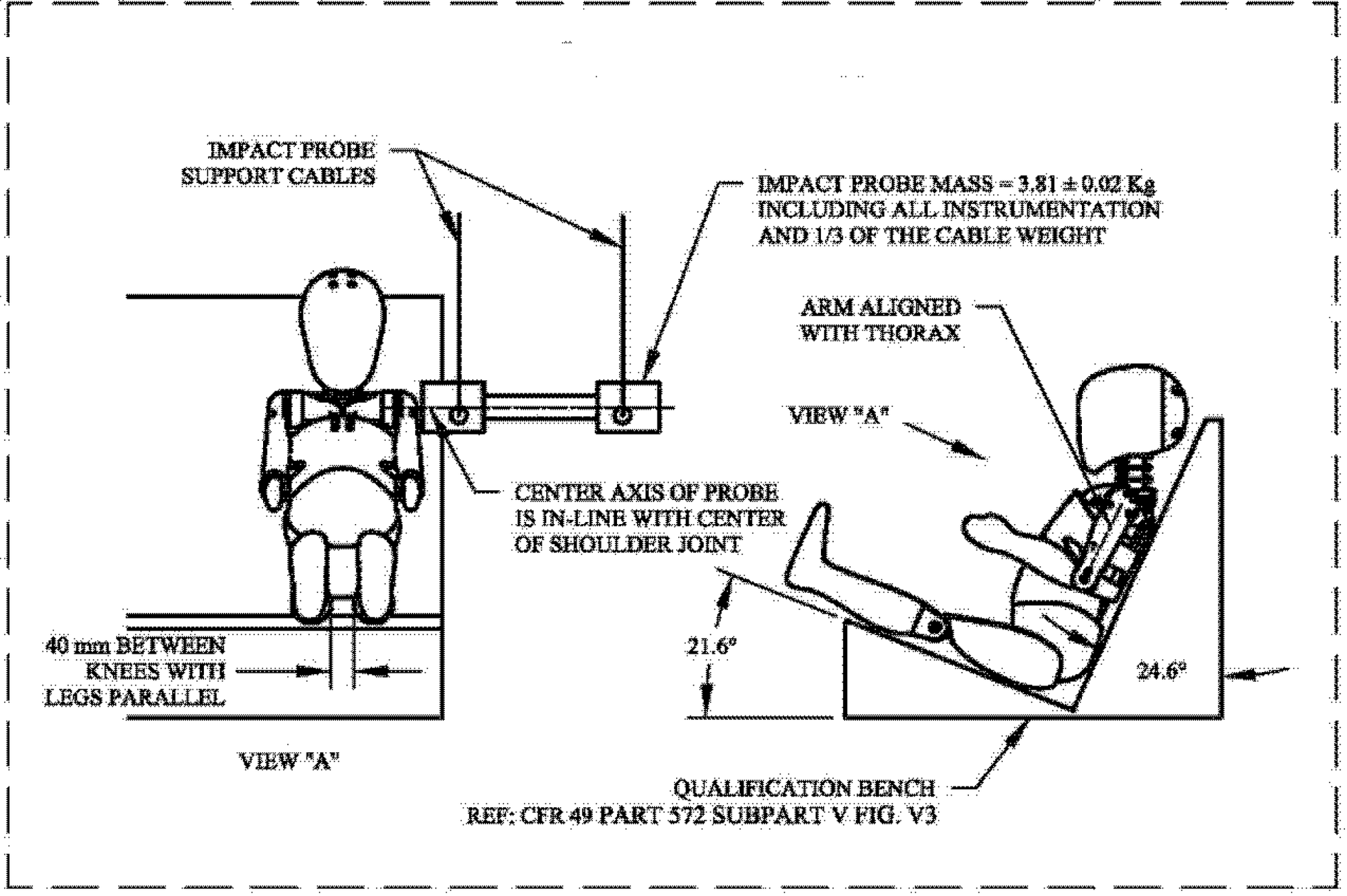

Figure W6. Lateral shoulder impact test set-up specifications.