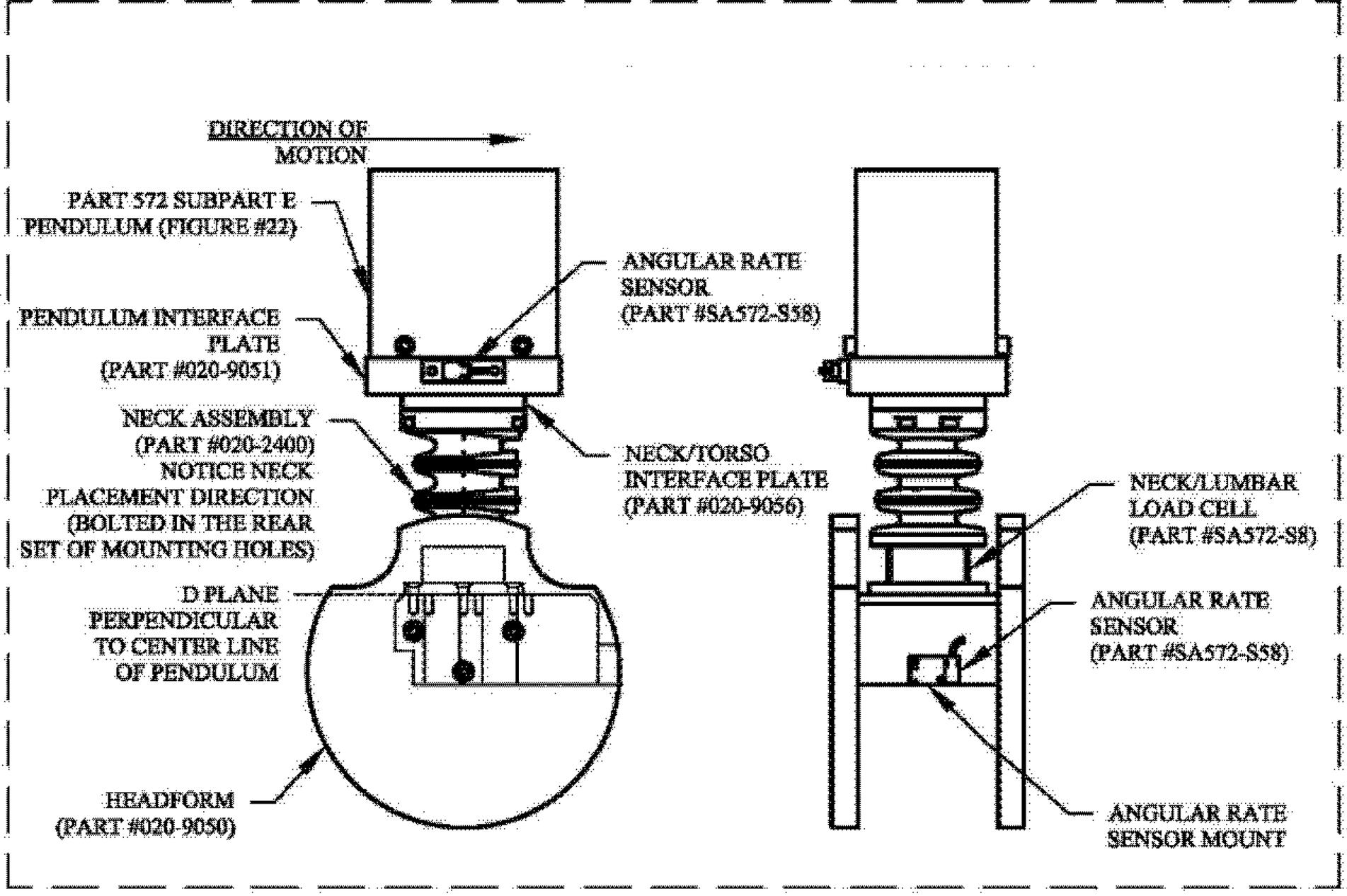

Figure W3. Neck frontal flexion test set-up specifications.