Figure 1 to paragraph (b)(2)(i)(D) - Large Object Glazing Test Projectile

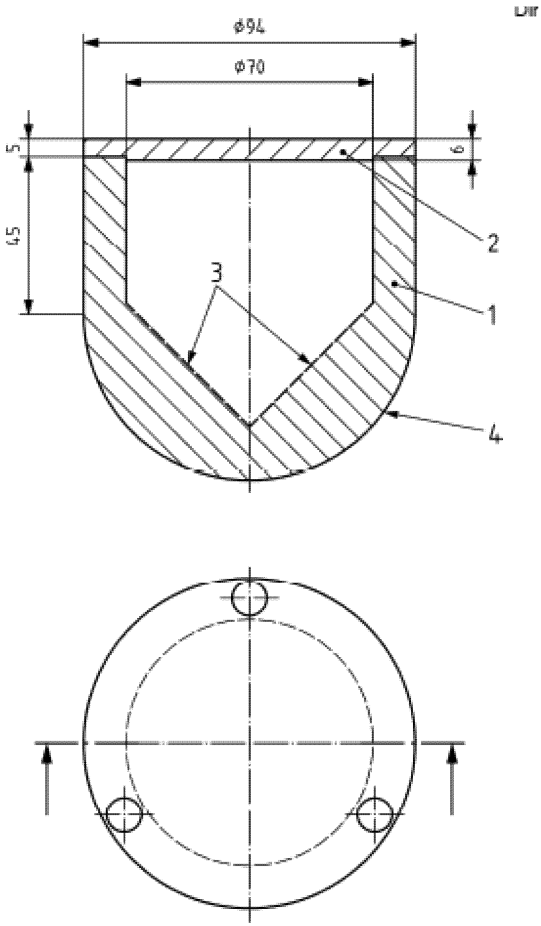

Key

1 projectile in aluminium alloy (ISO 6362-2:1990, grade 2017A)
2 steel projectile cover
3 material may be removed for adjustment purposes
4 milled surface of hemispheric tip (1 mm)