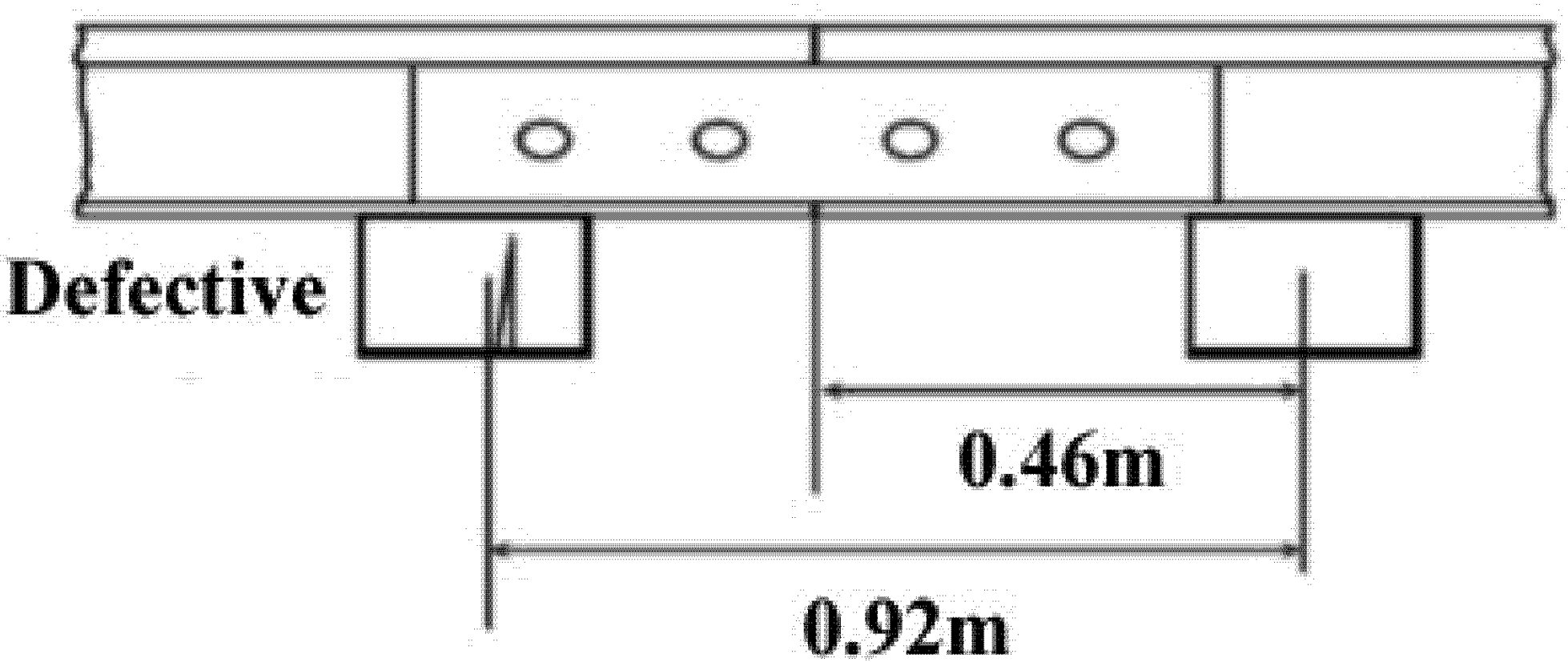Figure 2 to paragraph (e)(2) - Classes H2 and H3