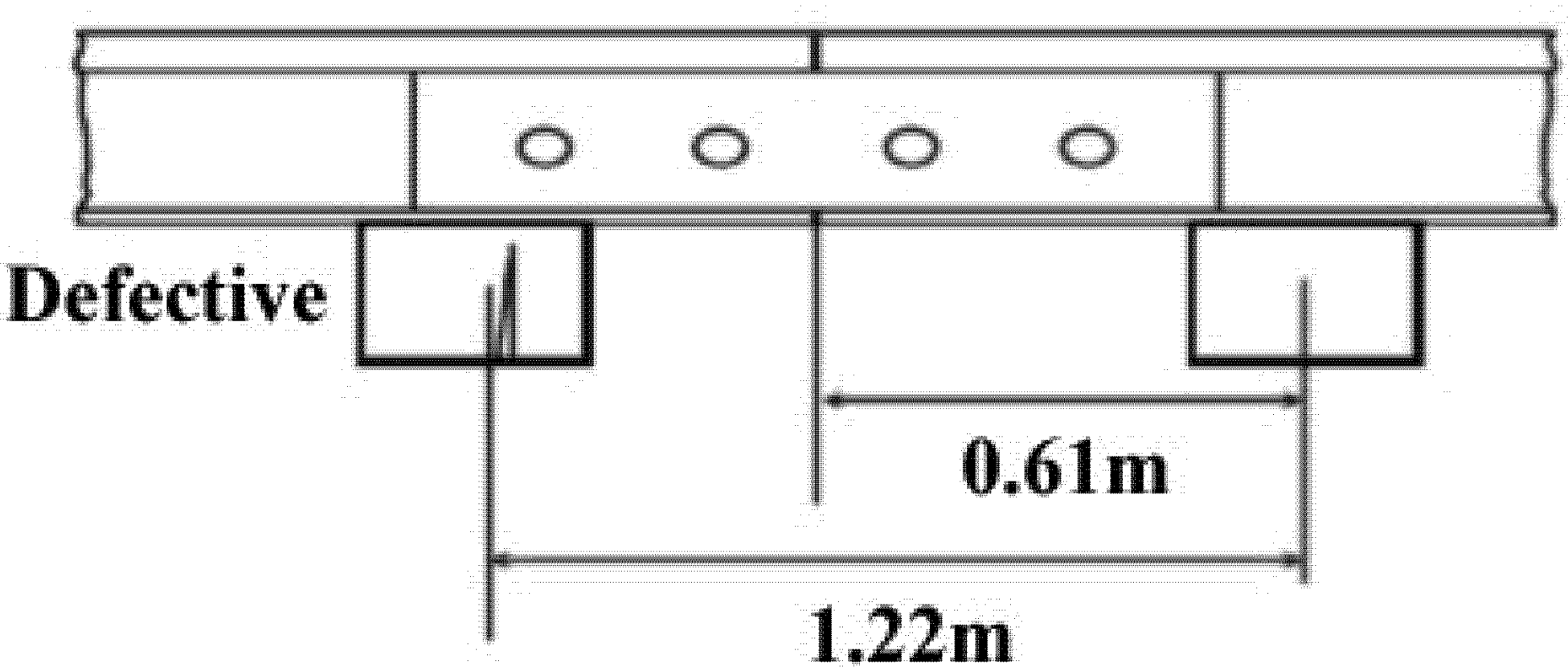Figure 1 to paragraph (e)(1) - Classes H0 and H1