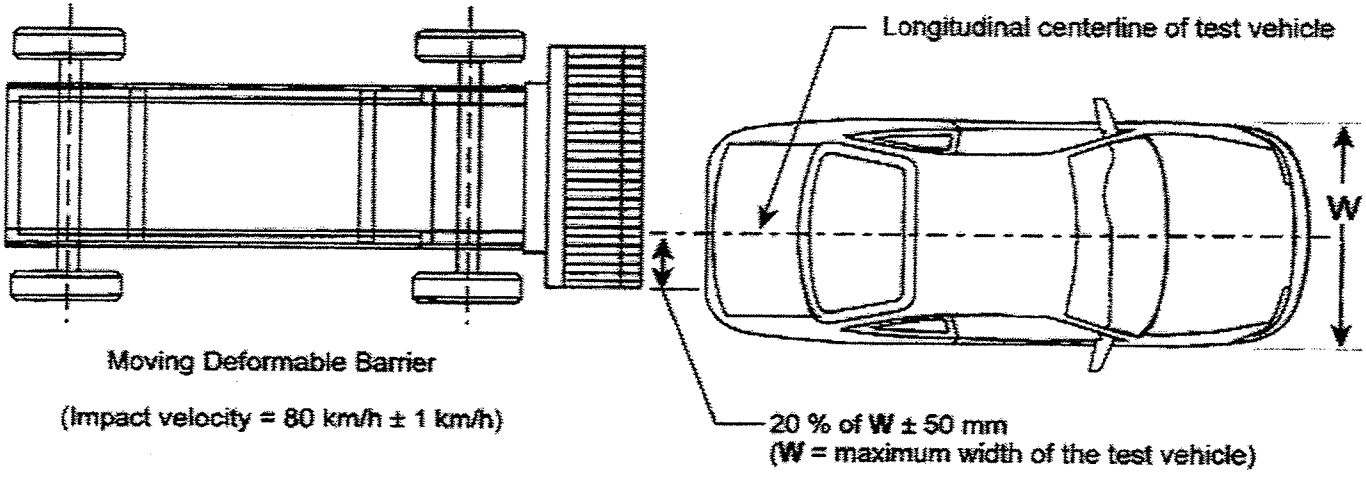

FIGURE 3 – MOVING DEFORMABLE BARRIER REAR IMPACT - 70 % OVERLAP