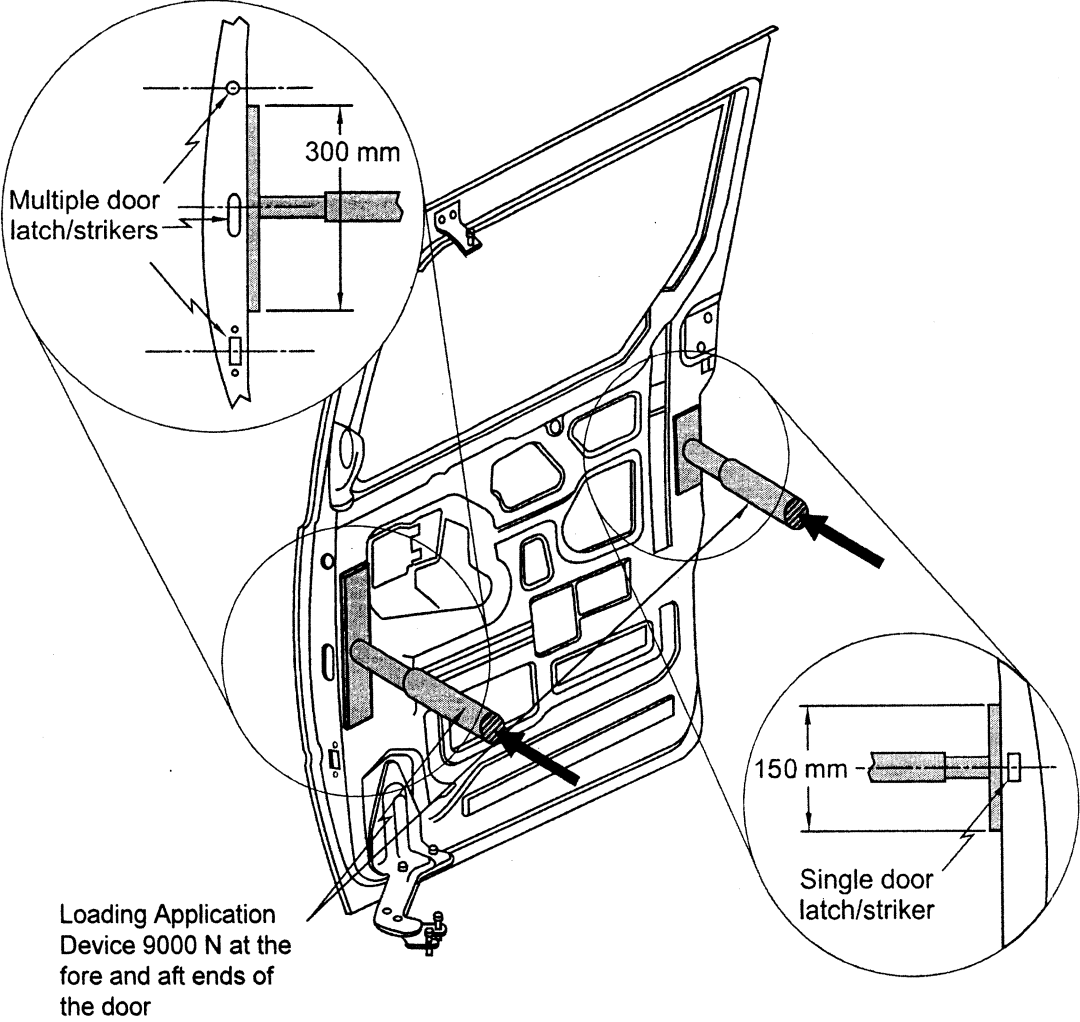

FIGURE 10 – Sliding Door Full Vehicle Test Procedure
(Note: Sliding door is shown separated from the vehicle)