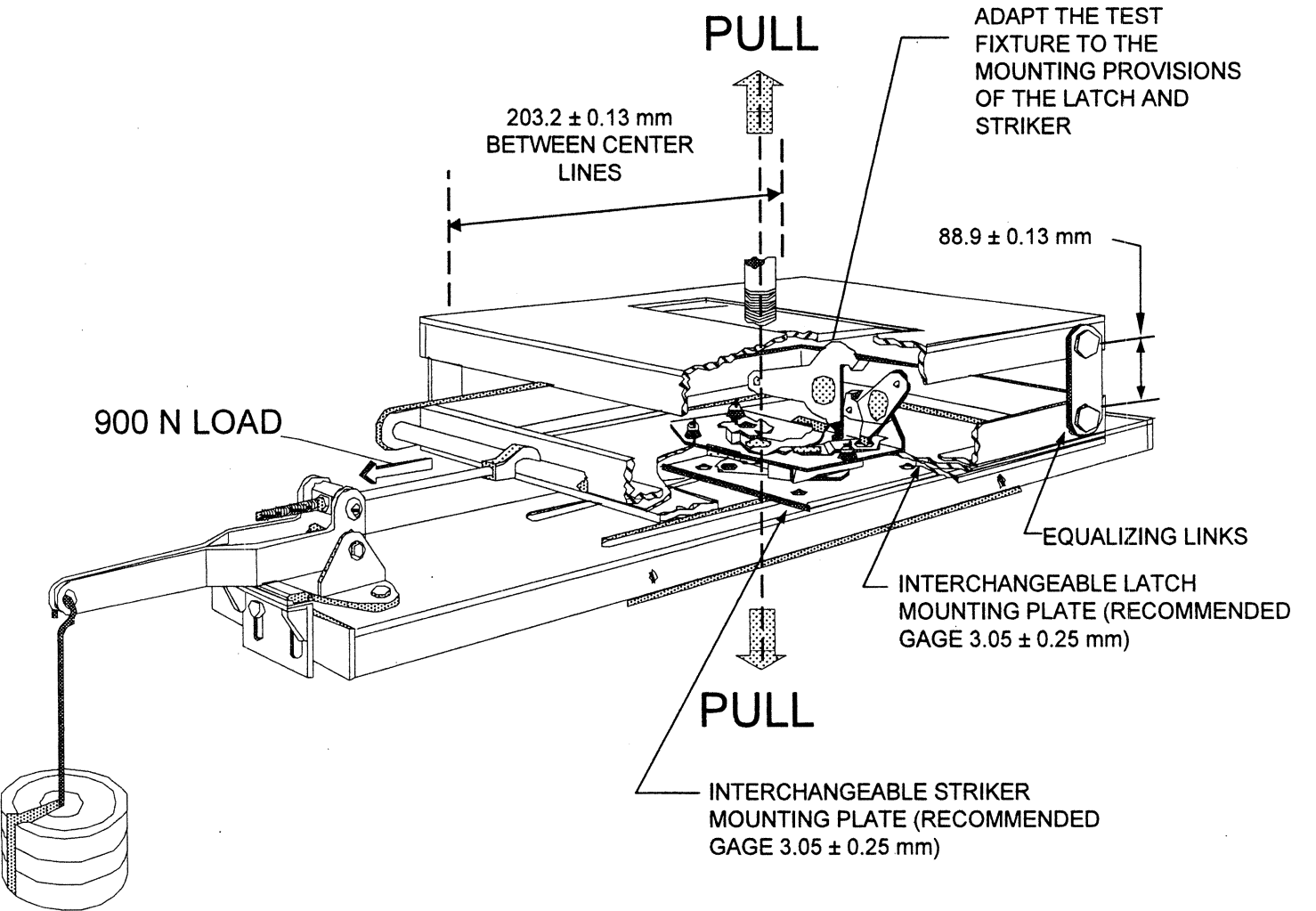FIGURE 2 - DOOR LATCH – TENSILE TESTING FIXTURE FOR LOAD TEST 1