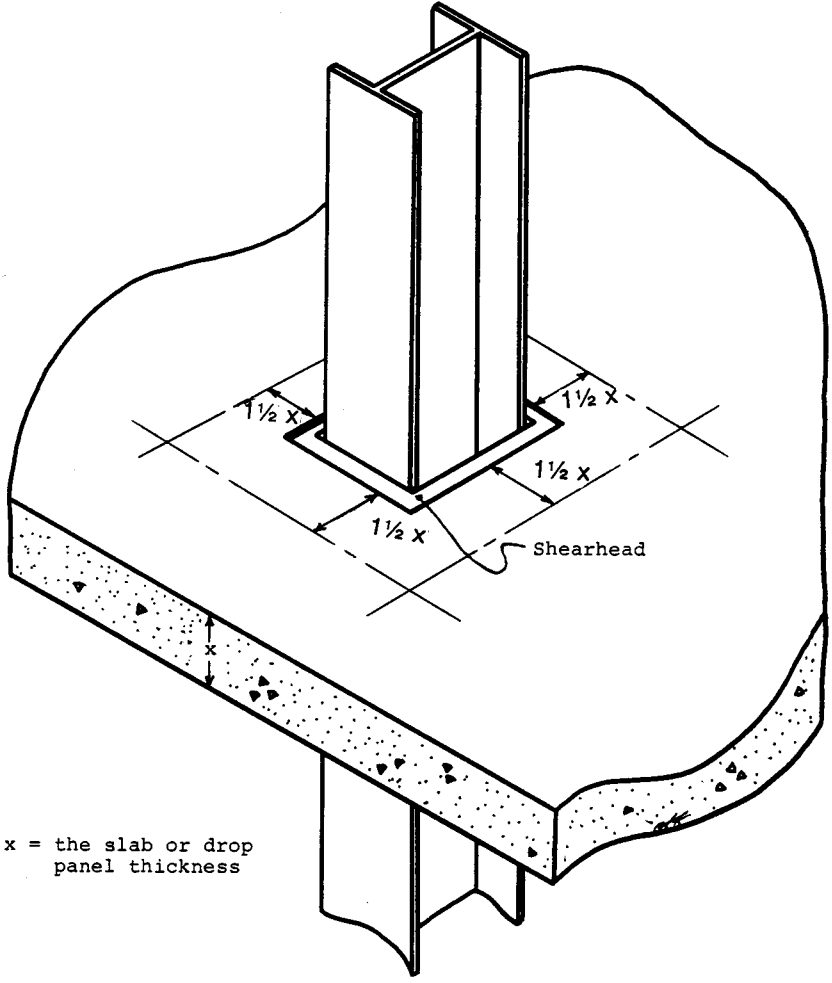

Figure 1--Column Head Area