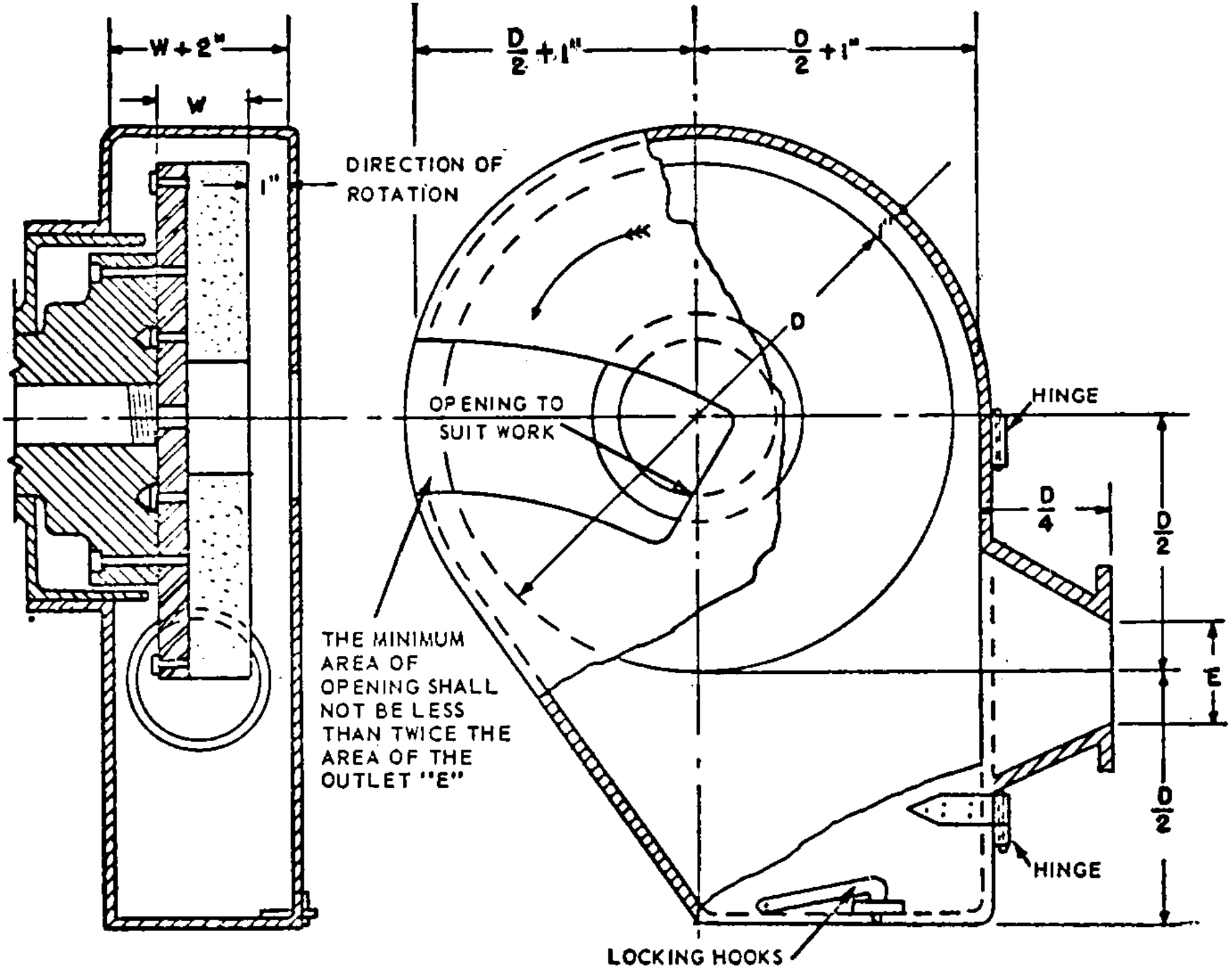
W + 2"
W
1"
DIRECTION OF ROTATION
D/2 + 1"
D/2 + 1"
1"
D
OPENING TO SUIT WORK
HINGE
D/4
D/2
E
D/2
HINGE
THE MINIMUM AREA OF OPENING SHALL NOT BE LESS THAN TWICE THE AREA OF THE OUTLET "E"
LOCKING HOOKS