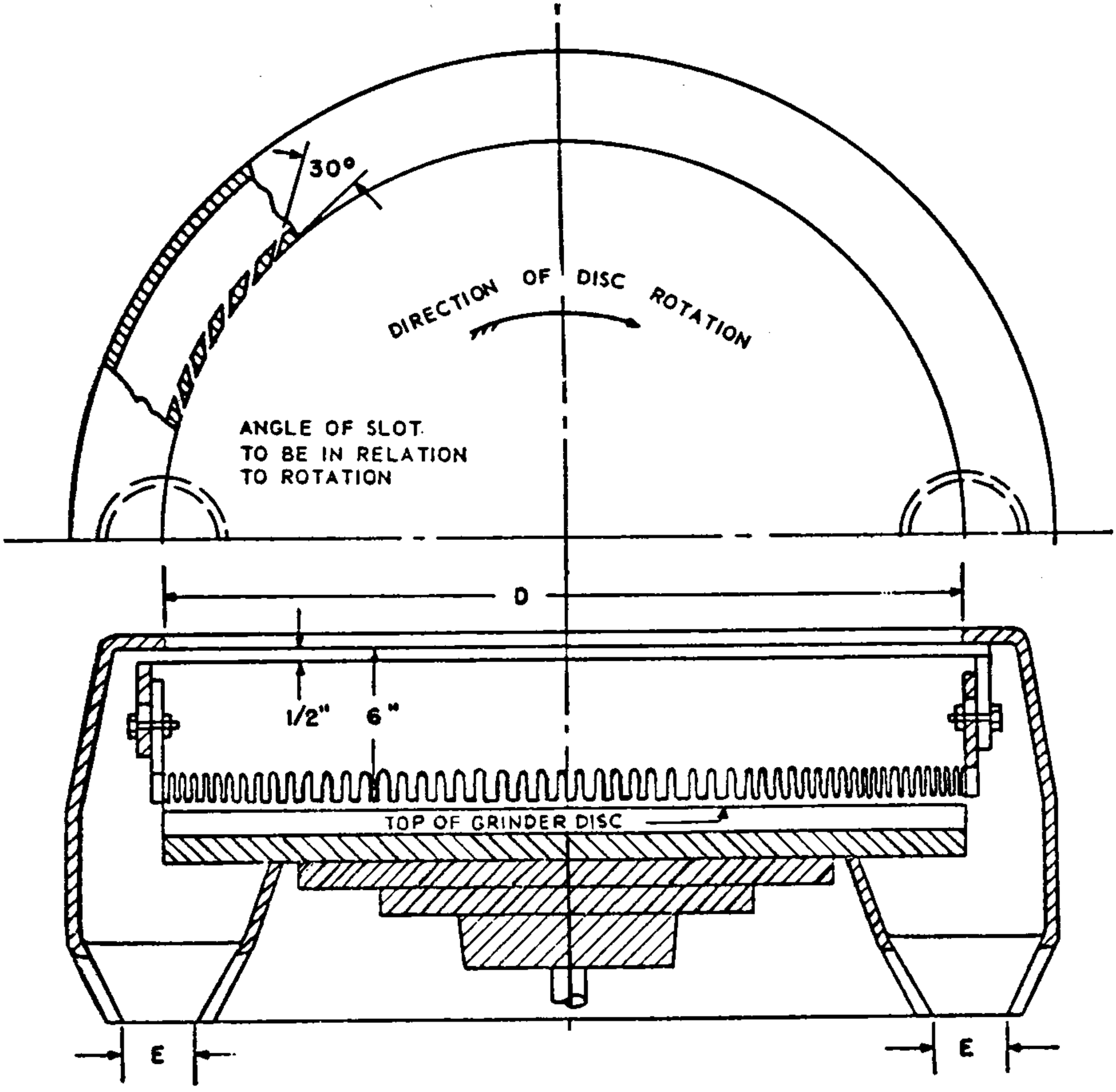
30°
DIRECTION OF DISC ROTATION
ANGLE OF SLOT
TO BE IN RELATION
TO ROTATION
D
1/2"
6"
TOP OF GRINDER DISC
E
E