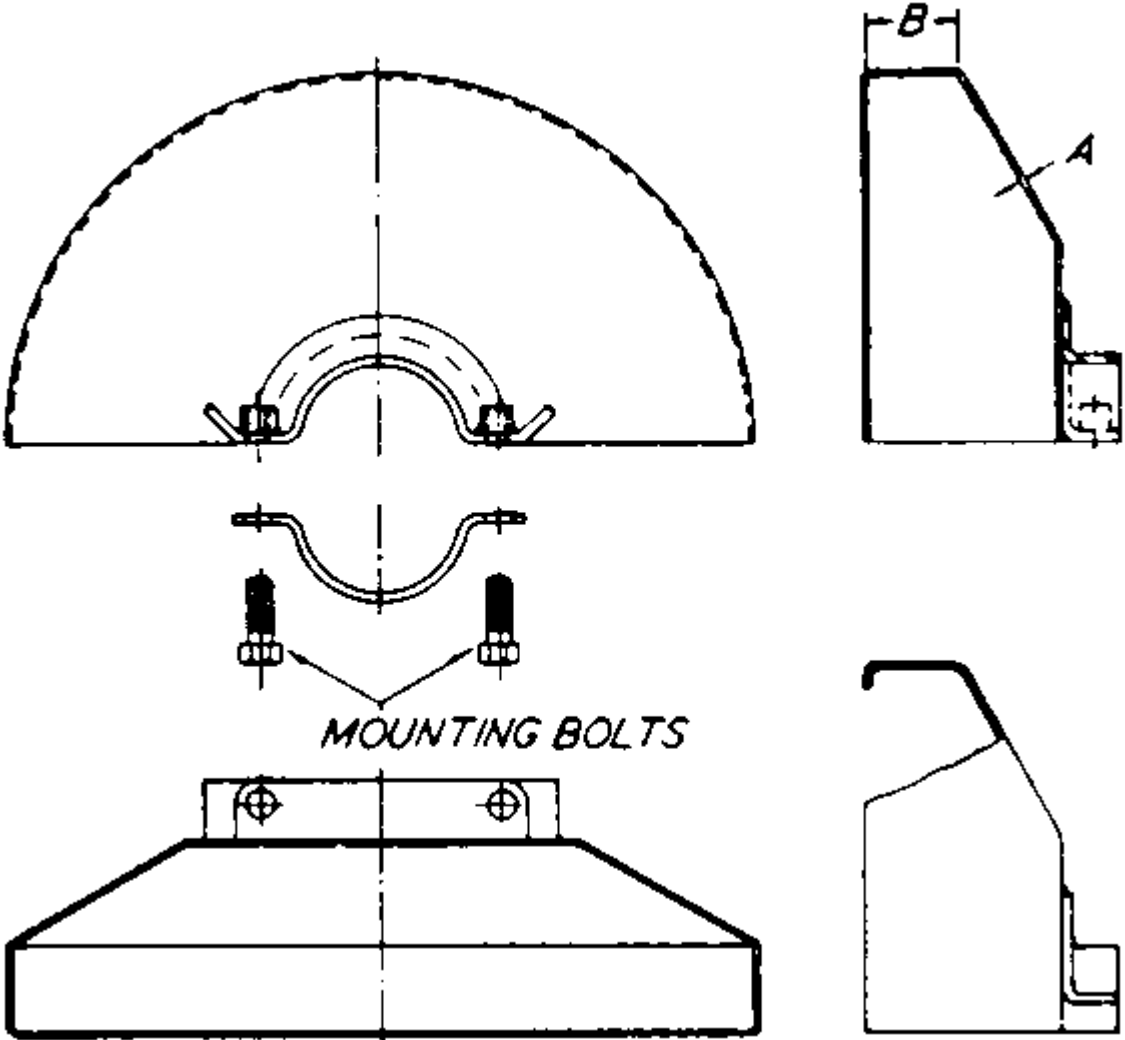
B
A
MOUNTING BOLTS