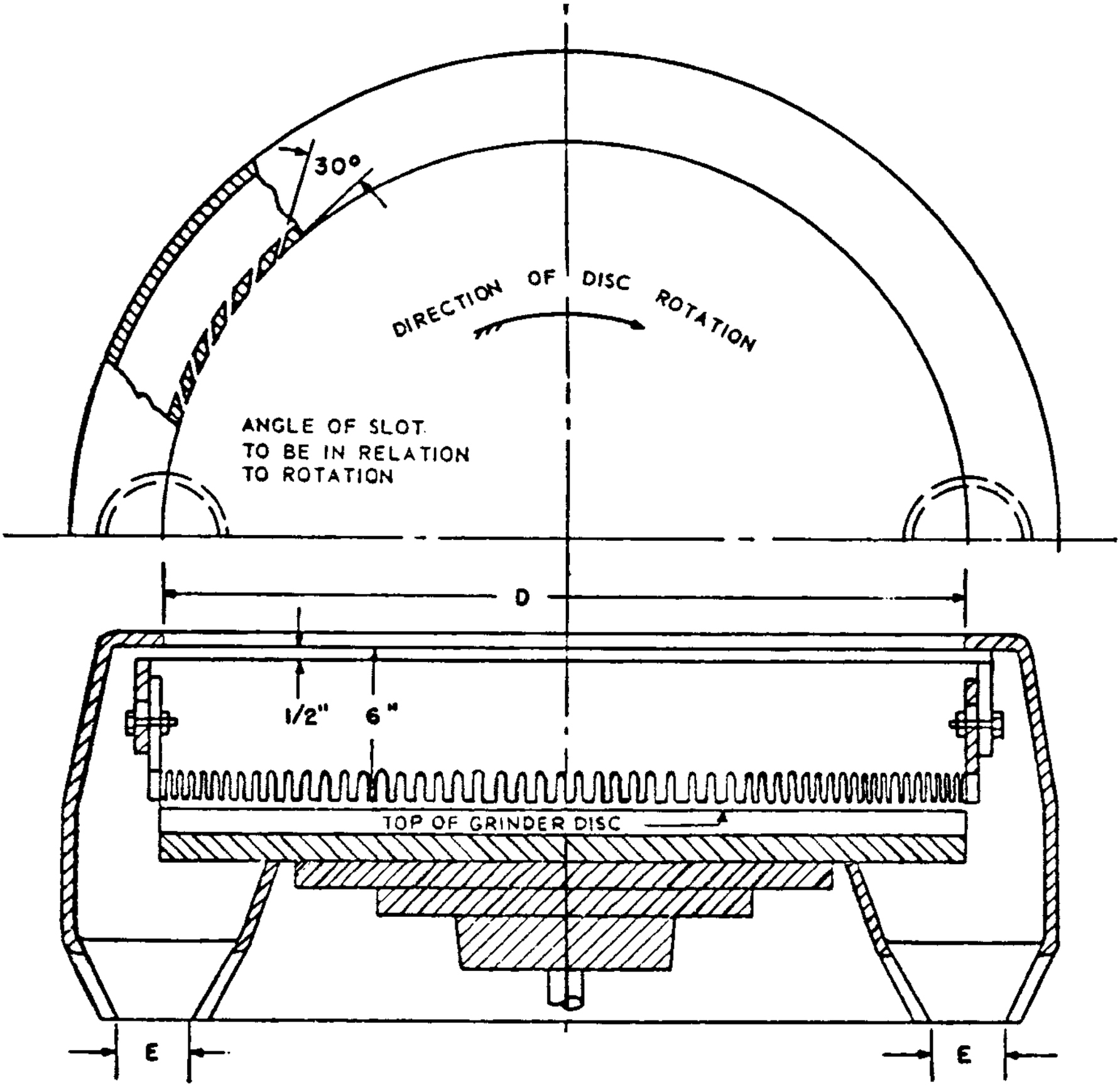

Fig. G-1

Vertical Spindle Disc Grinder Exhaust Hood and Branch Pipe Connections