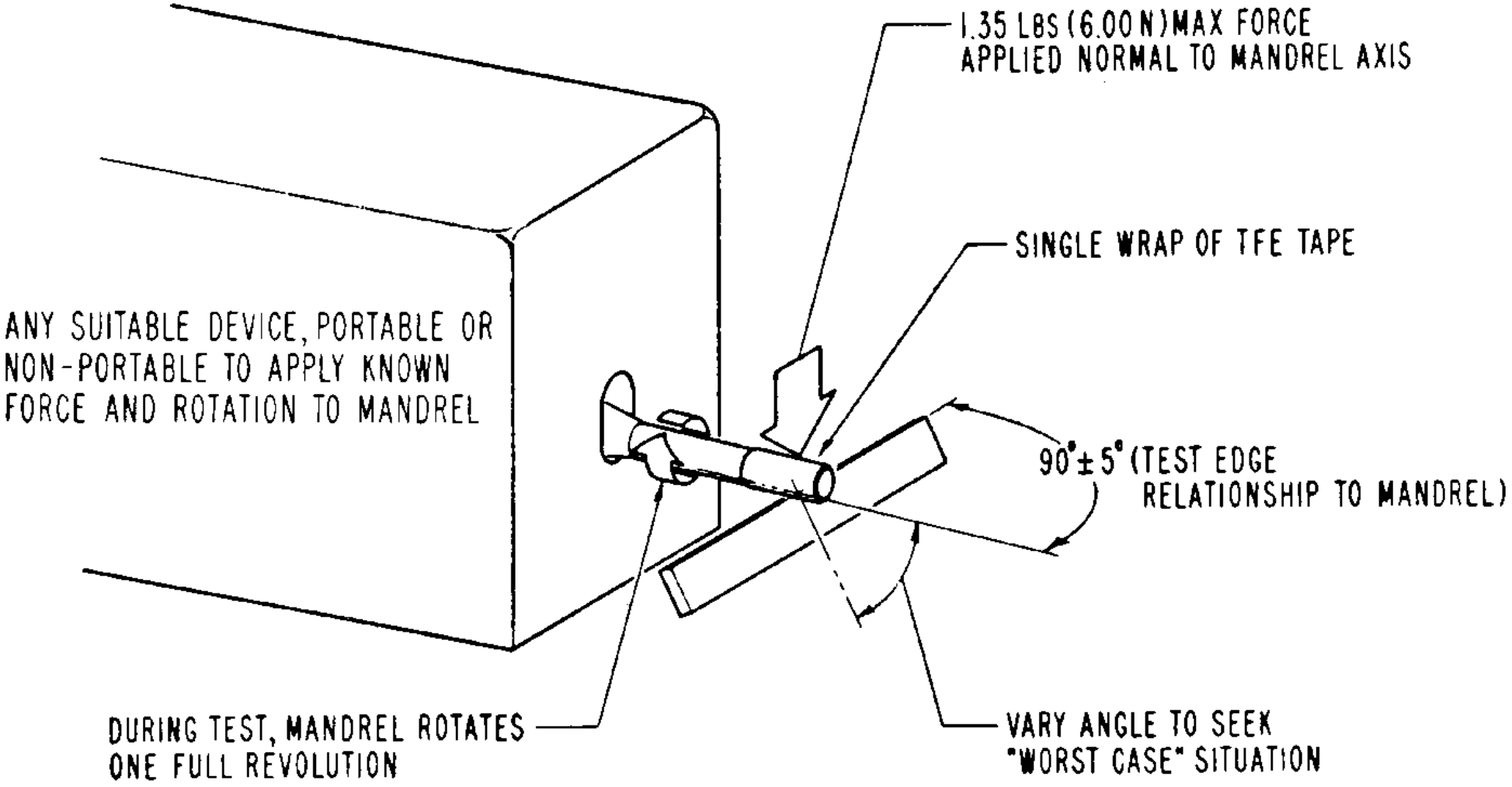

FIG 1—PRINCIPLE OF SHARP EDGE TEST