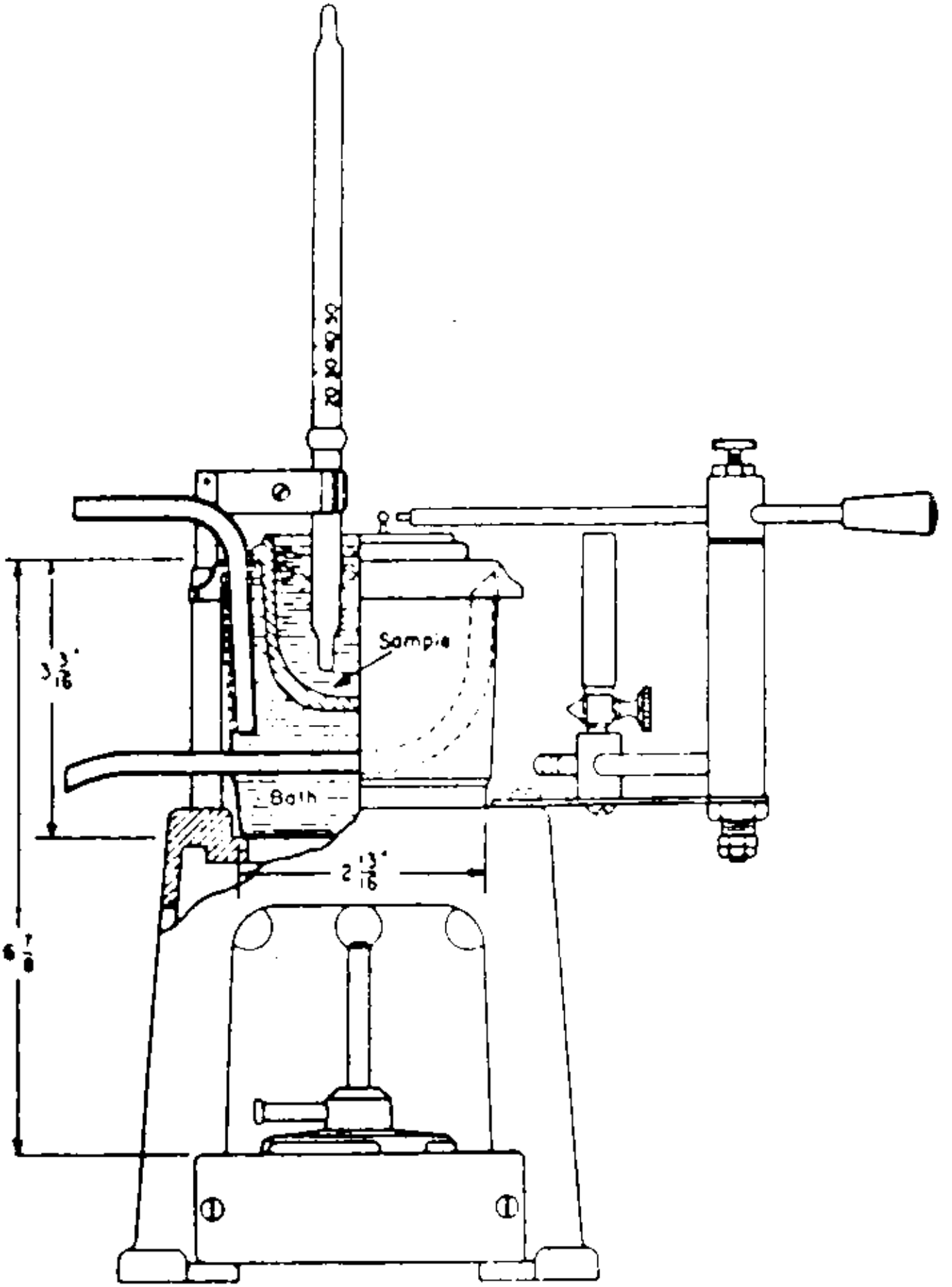

FIGURE 1—Tag open-cup flash tester