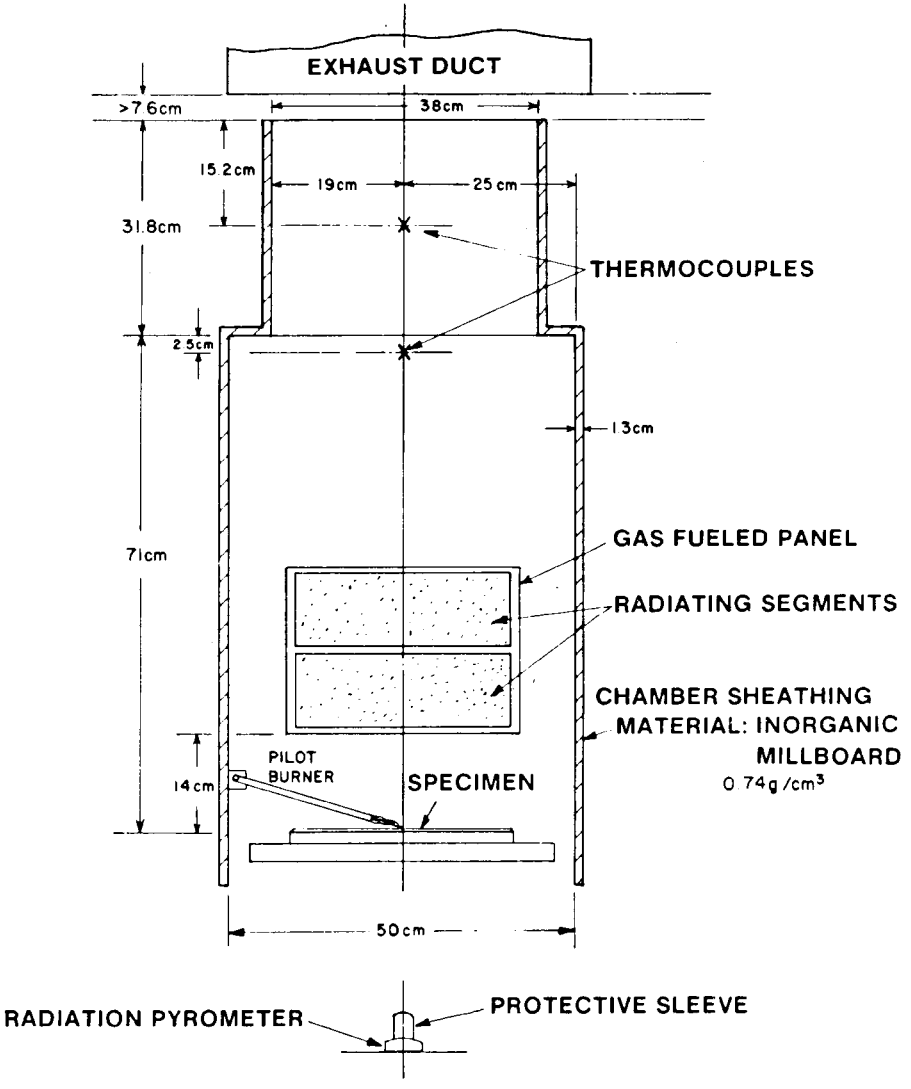


FIG 4 — **FLOORING RADIANT PANEL TESTER SCHEMATIC**
**LOW FLUX END, ELEVATION**