FIG. G
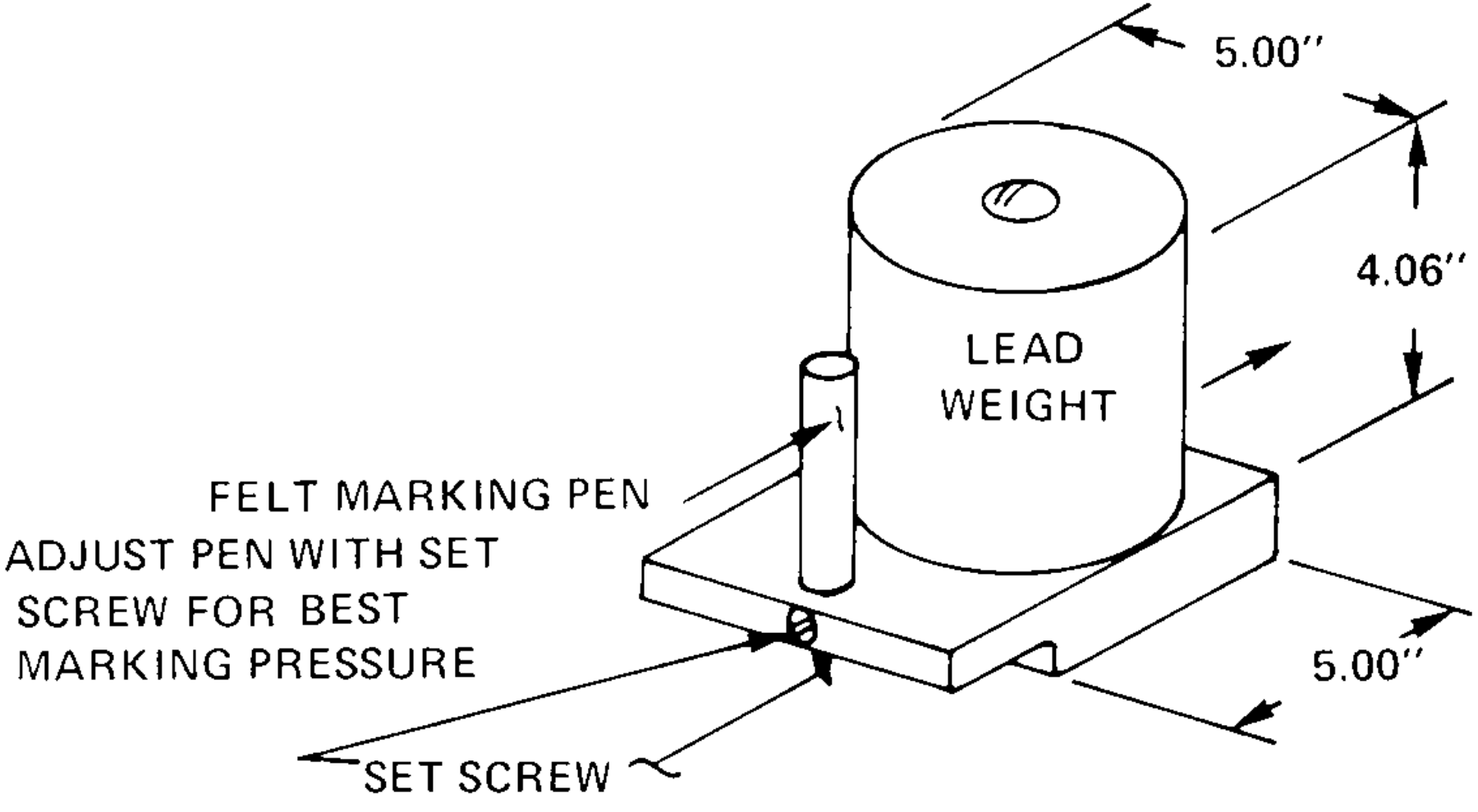
ASSEMBLY FOR MEASUREMENT OF RUNWAY EQUILIBRIUM