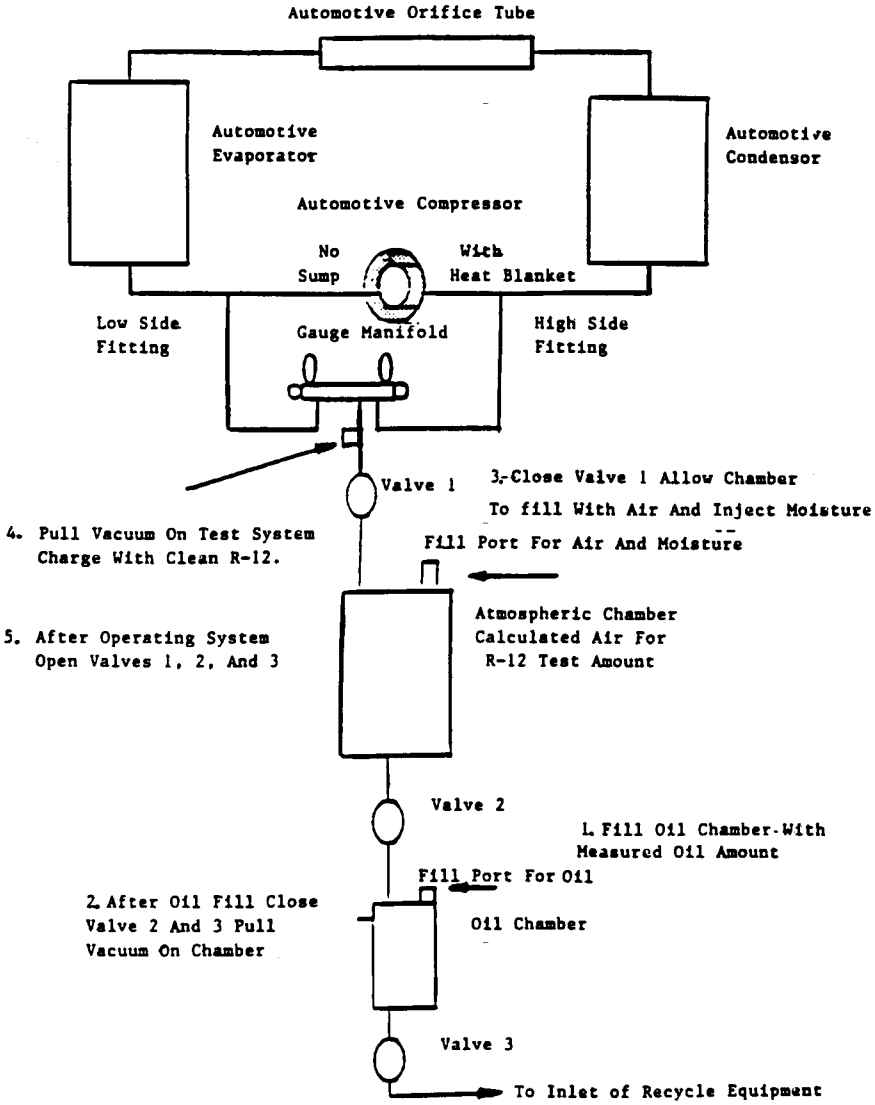
Automotive Orifice Tube
Automotive Evaporator
Automotive Condensor
Automotive Compressor
No Sump
With Heat Blanket
Low Side Fitting
Gauge Manifold
High Side Fitting
Valve 1
3. Close Valve 1 Allow Chamber To fill With Air And Inject Moisture
4. Pull Vacuum On Test System Charge With Clean R-12.
Fill Port For Air And Moisture
Atmospheric Chamber Calculated Air For R-12 Test Amount
5. After Operating System Open Valves 1, 2, And 3
Valve 2
1. Fill Oil Chamber With Measured Oil Amount
Fill Port For Oil
2. After Oil Fill Close Valve 2 And 3 Pull Vacuum On Chamber
Oil Chamber
Valve 3
To Inlet of Recycle Equipment

FIGURE 1