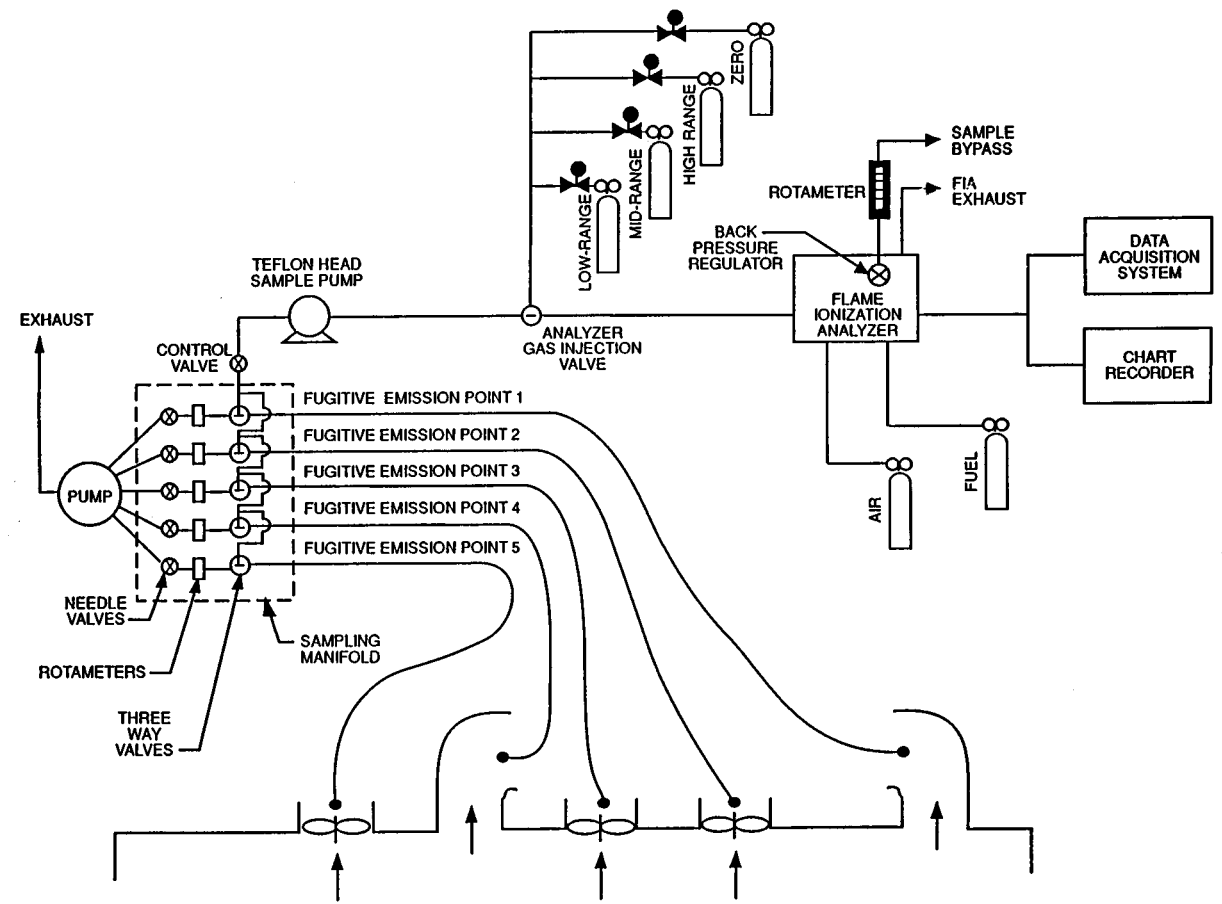

Figure 1. Fugitive emissions measurement system.