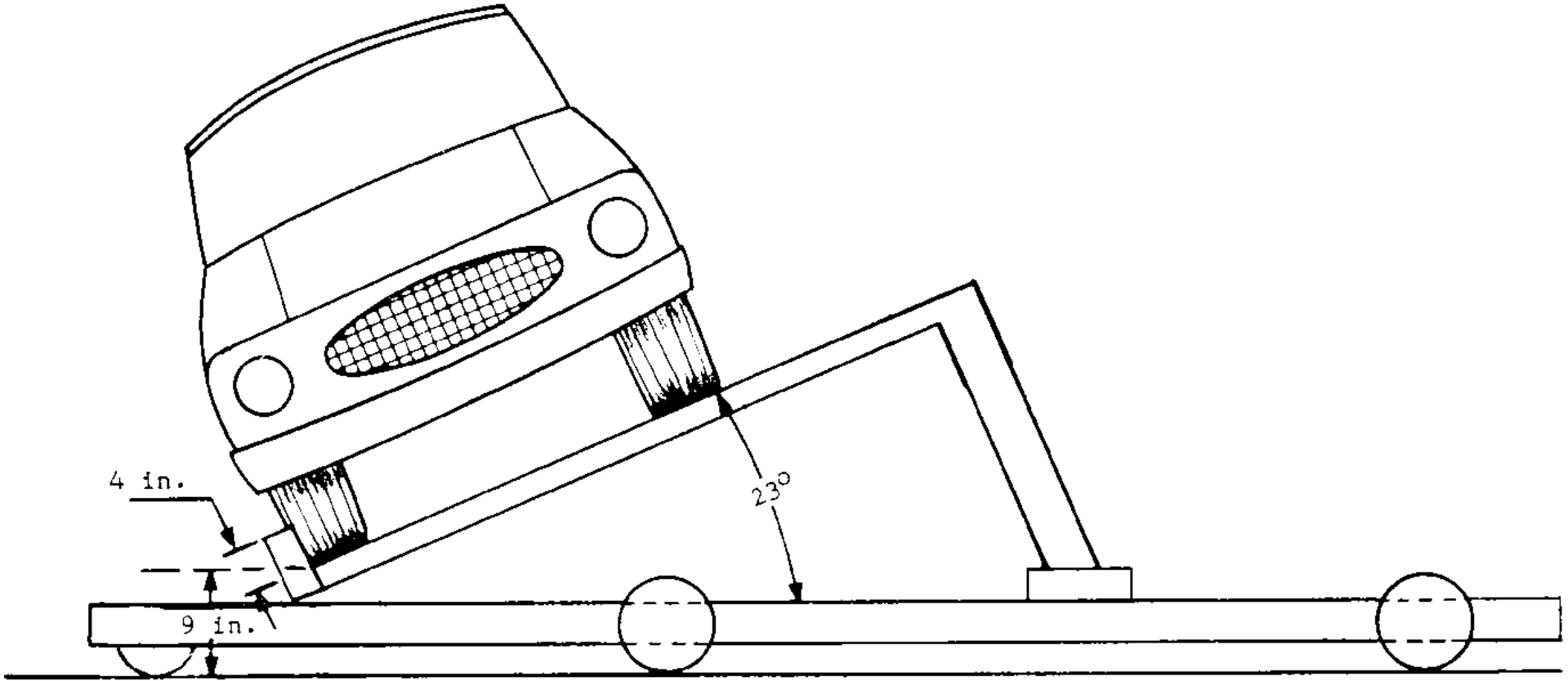

FIGURE 2 - TYPICAL DEVICE FOR ROLLOVER TEST