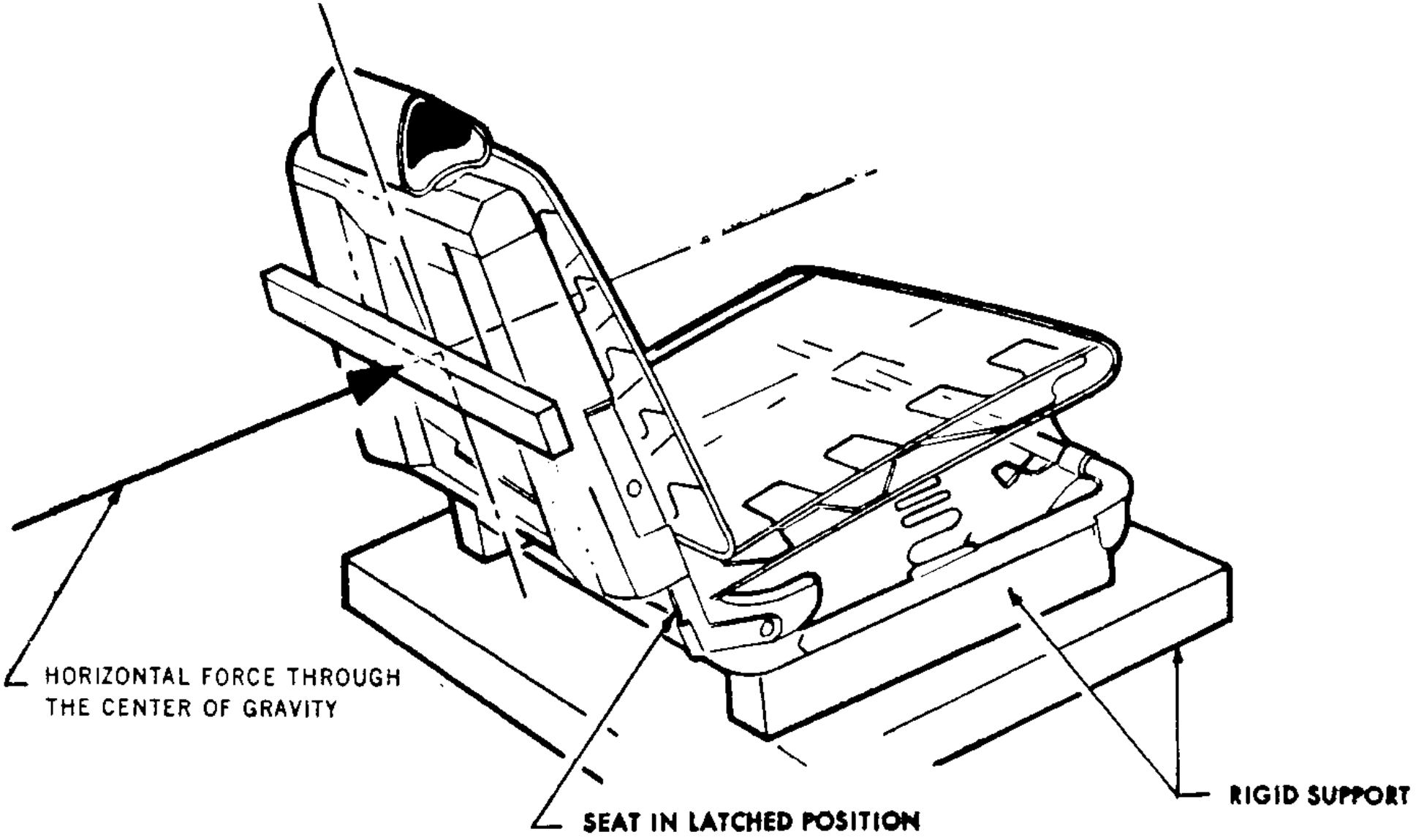
HORIZONTAL FORCE THROUGH
THE CENTER OF GRAVITY
SEAT IN LATCHED POSITION
RIGID SUPPORT

FIGURE 5