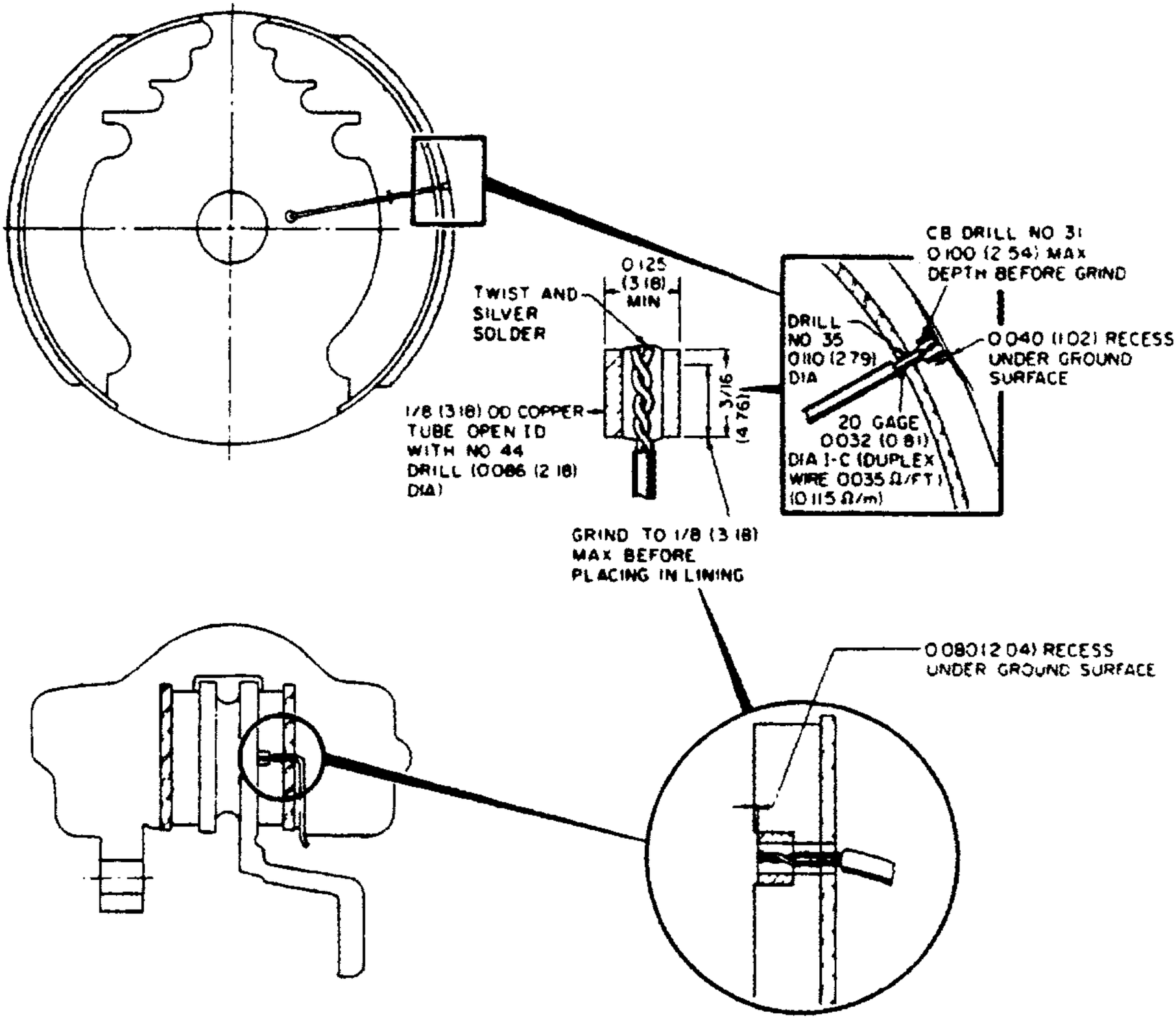

DIMENSIONS ARE IN (mm)

Figure 1–Typical Plug-Type Thermocouple Installations