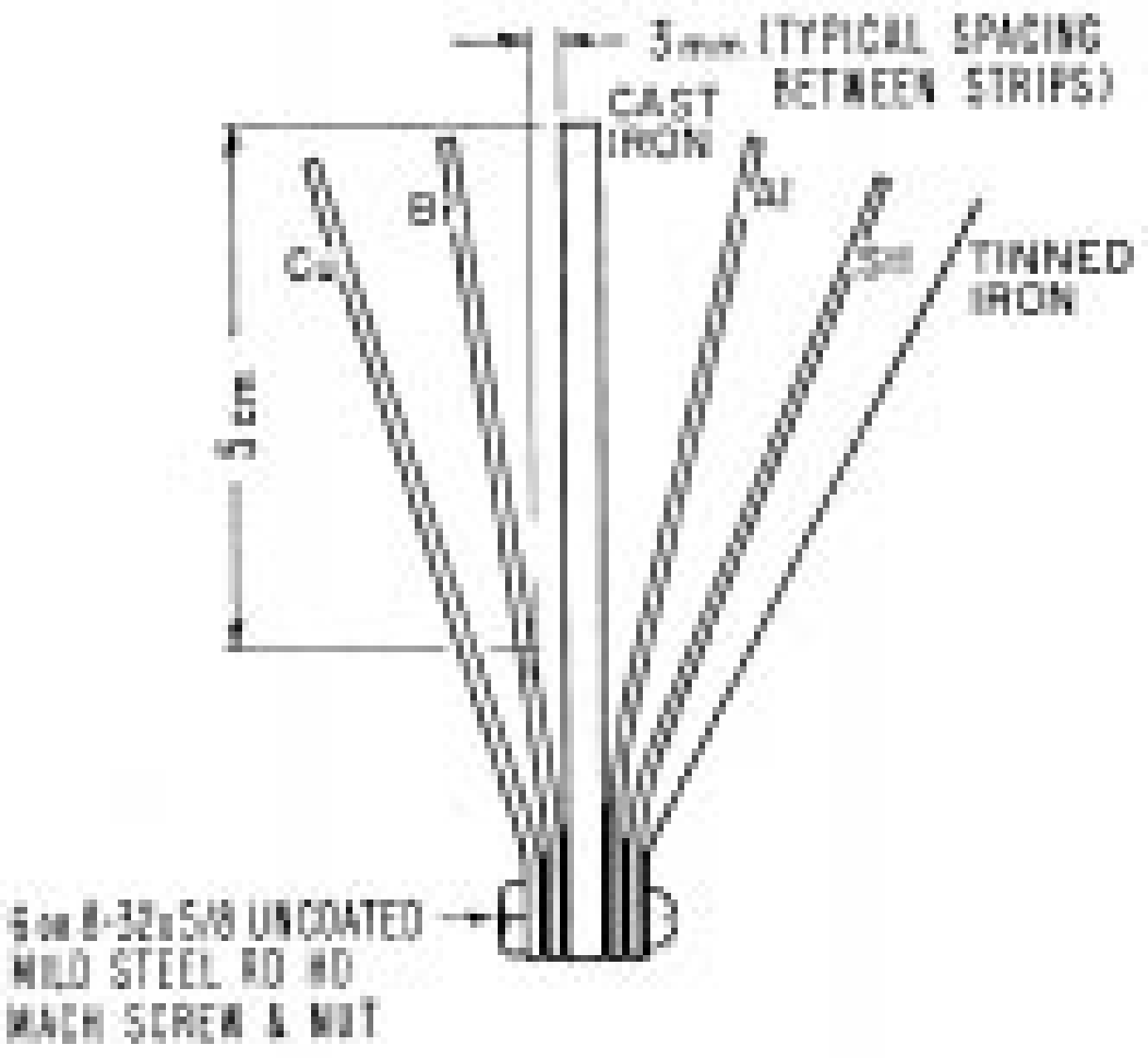
3 mm (TYPICAL SPACING BETWEEN STRIPS)
CAST IRON
B
C
Al
Sn
TINNED IRON
3 cm
5 cm 8-32x5/8 UNCOATED MILD STEEL RD HD MACH SCREW & NUT