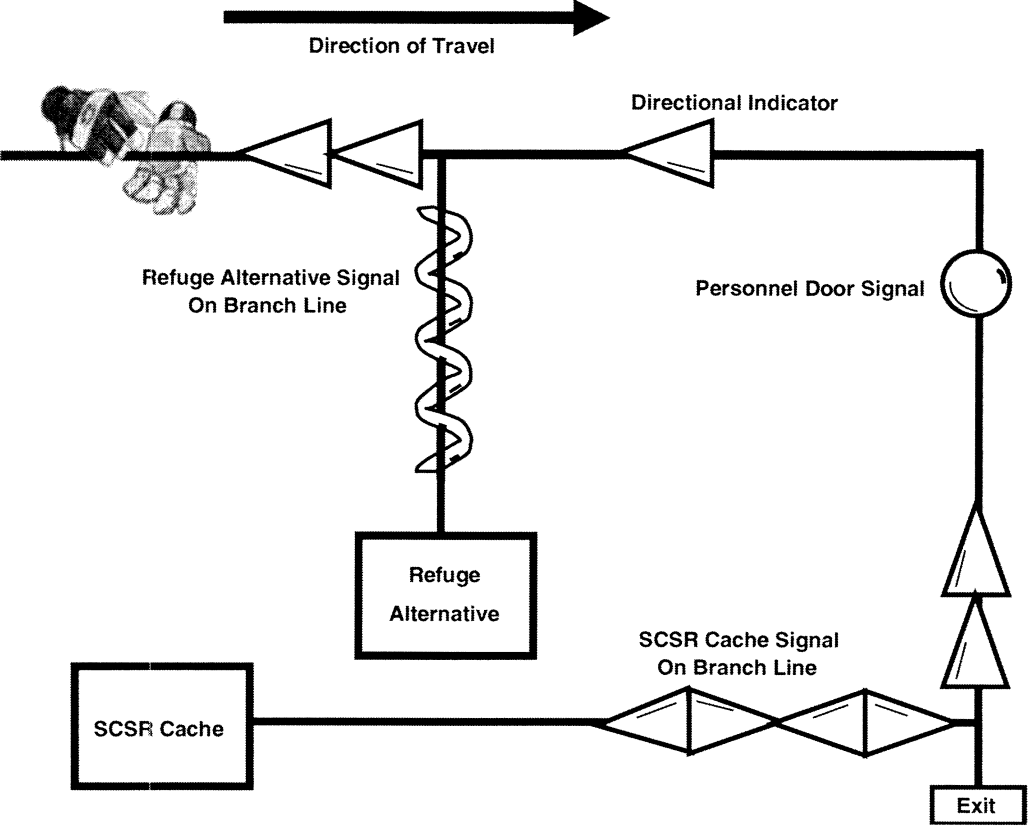

Illustration 1