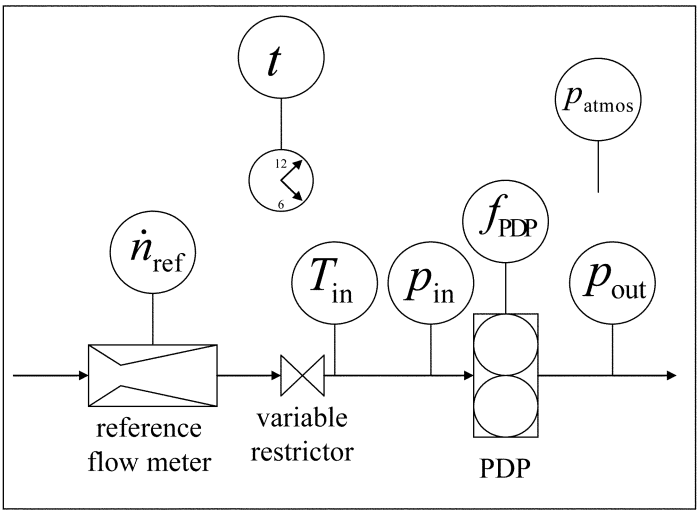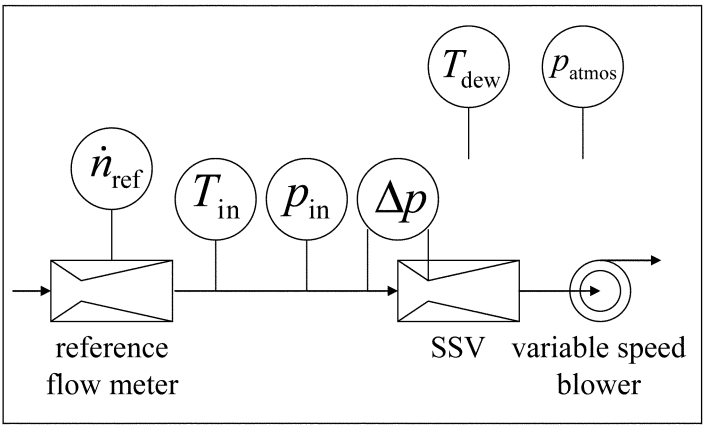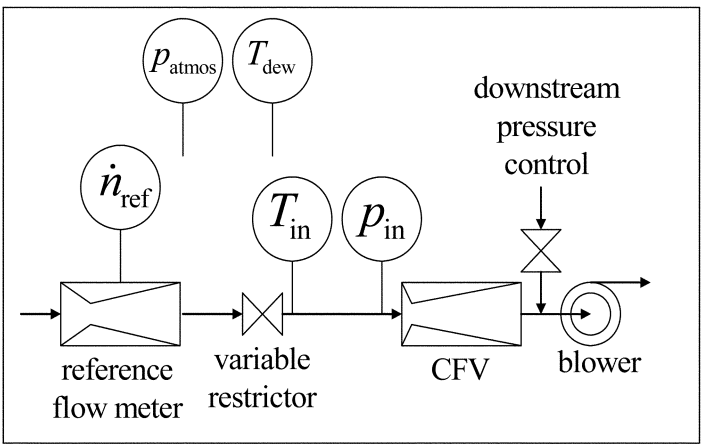Figure 1 of § 1066.140—CVS calibration configurations