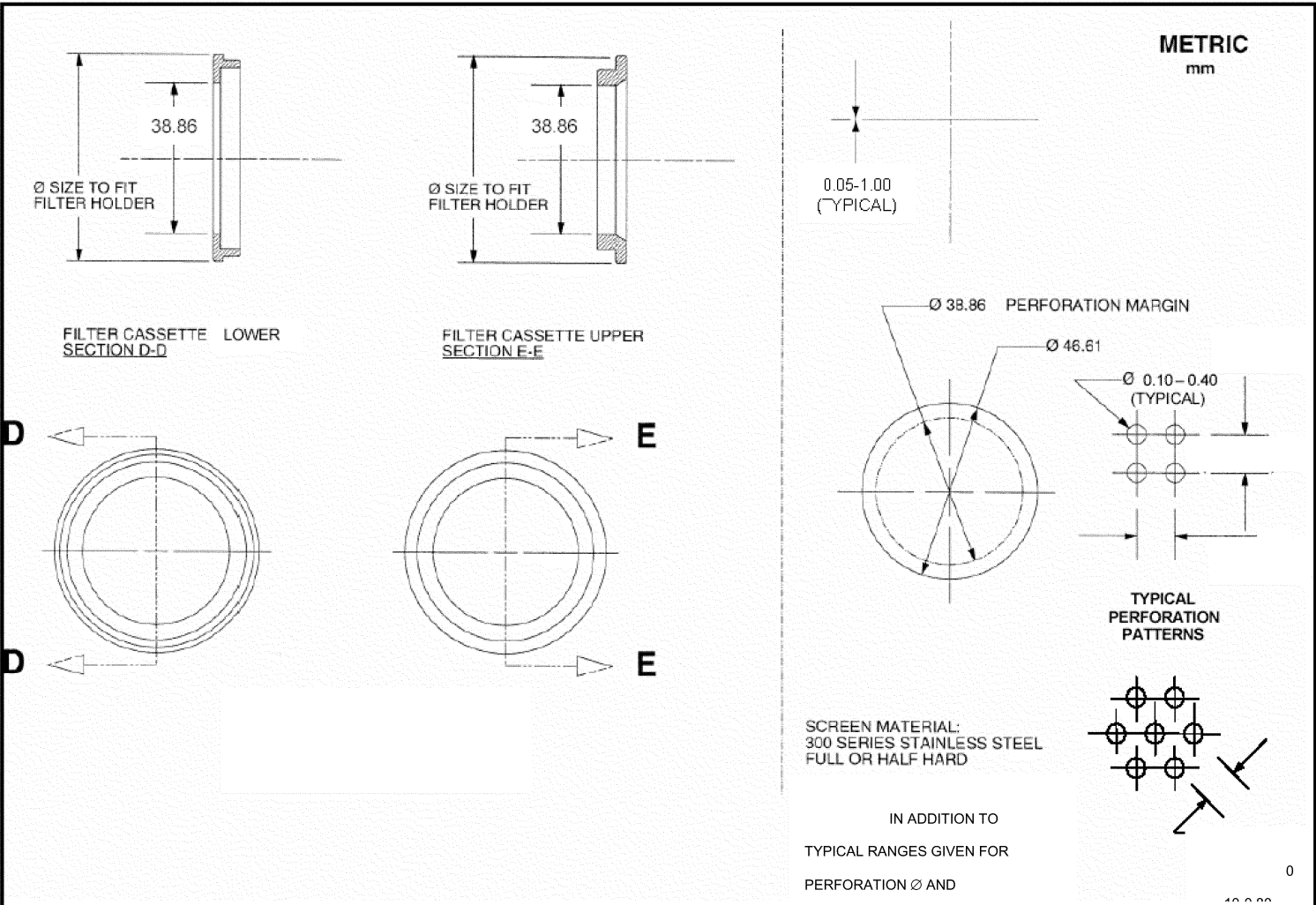Figure 1 of §1065.170—PM filter cassette specifications.