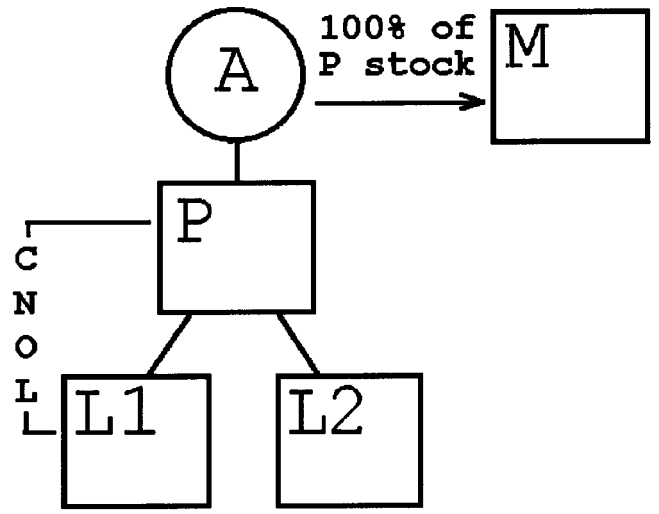
A
100% of
P stock
M
P
CNOL
L1
L2

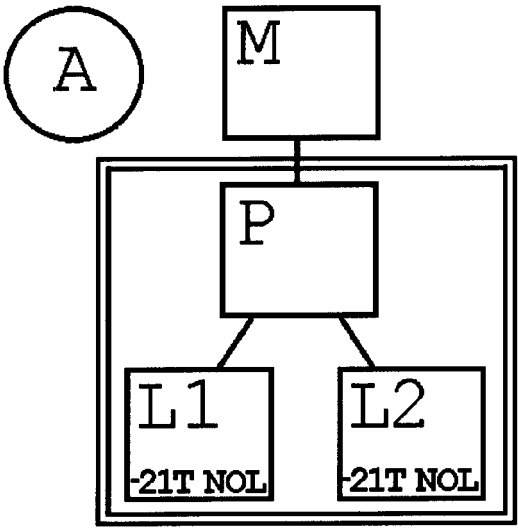
A
M
P
L1
-21T NOL
L2
-21T NOL

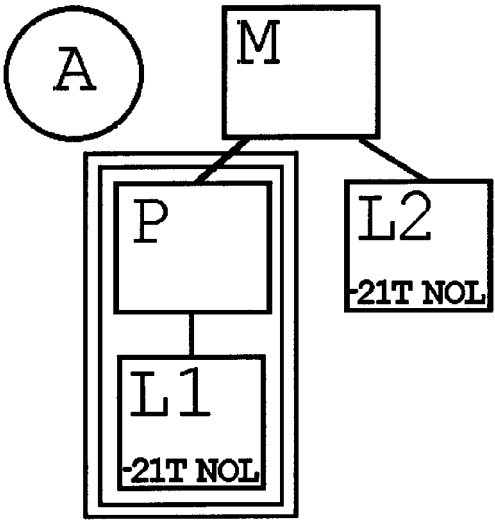
A
M
P
L2
-21T NOL
L1
-21T NOL