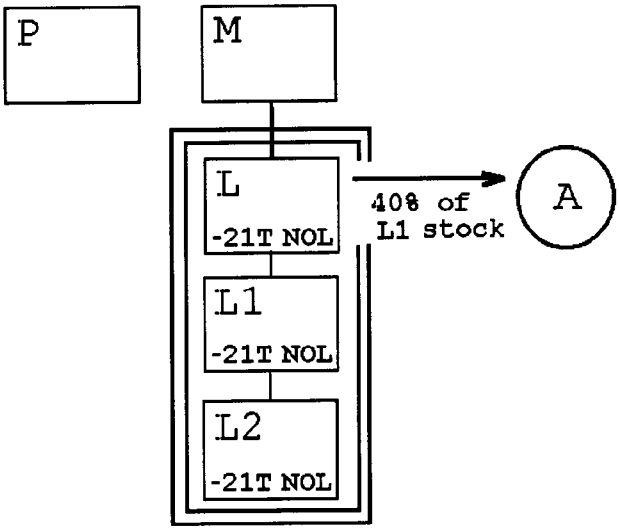
P
M
L
-21T NOL
L1
-21T NOL
L2
-21T NOL
40% of
L1 stock
A

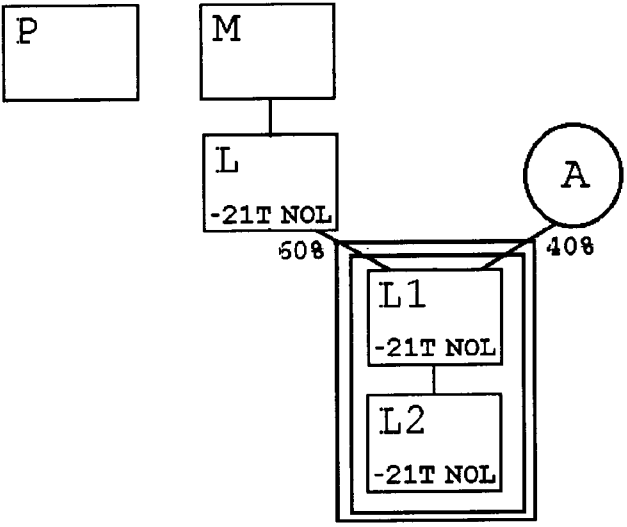
P
M
L
-21T NOL
A
60%
40%
L1
-21T NOL
L2
-21T NOL