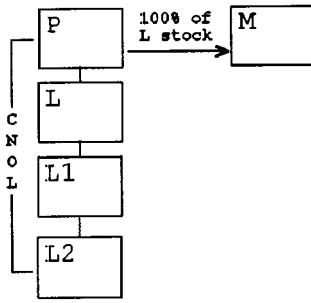
P
100% of
L stock
M
CNOL
L
L1
L2

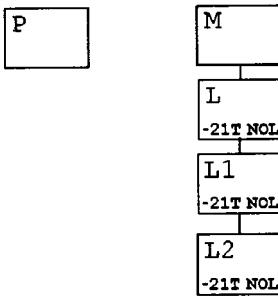
P
M
L
-21T NOL
L1
-21T NOL
L2
-21T NOL

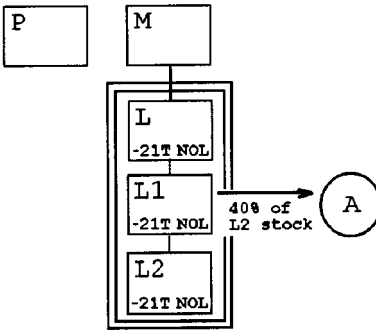
P
M
L
-21T NOL
L1
-21T NOL
L2
-21T NOL
40% of
L2 stock
A

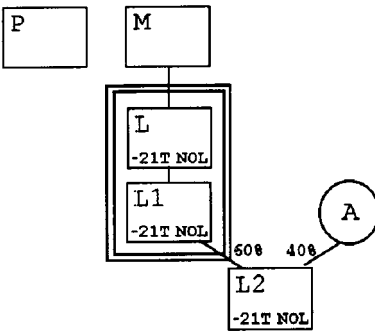
P
M
L
-21T NOL
L1
-21T NOL
A
60%
40%
L2
-21T NOL