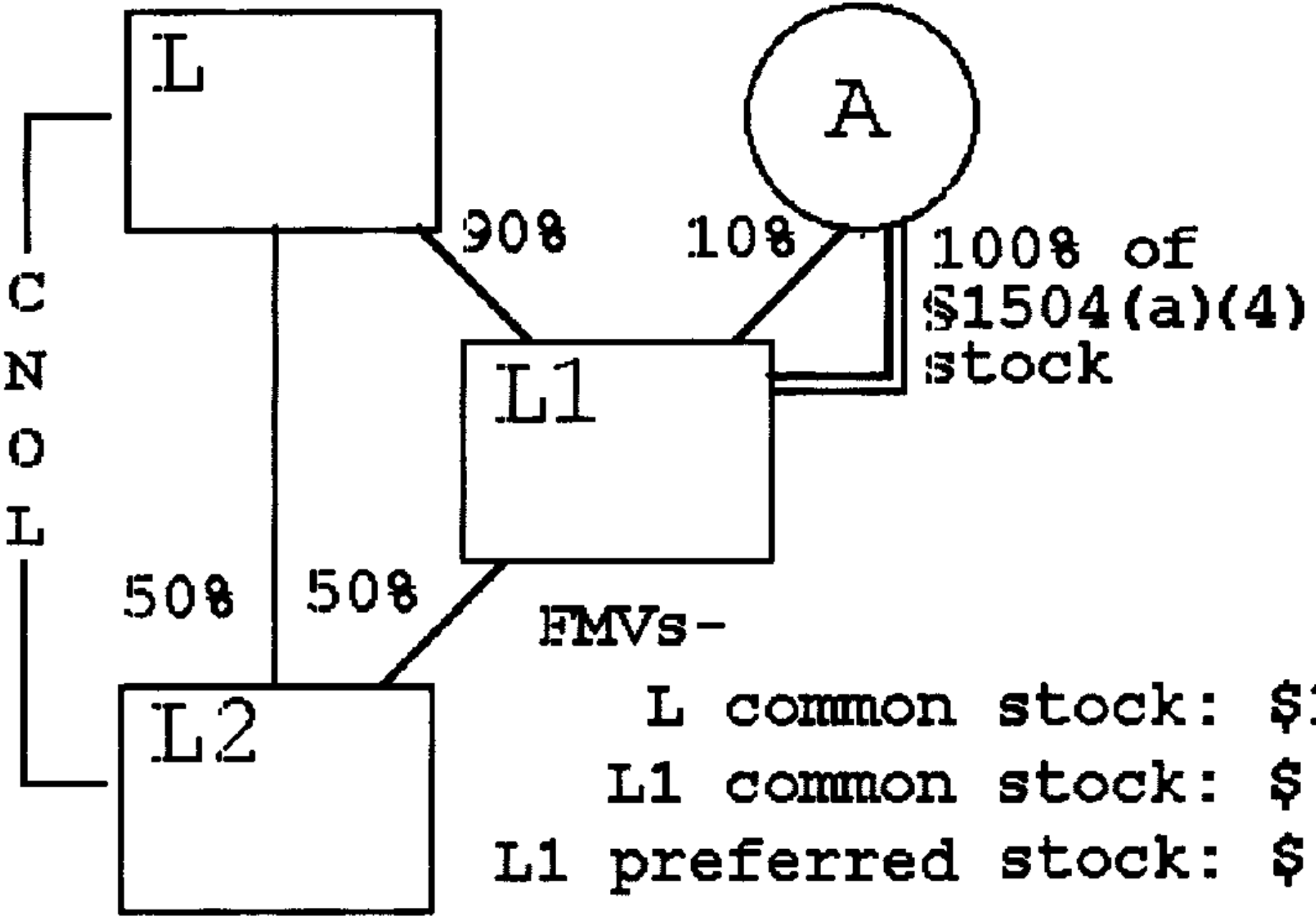
L
A
CNOL
90%
10%
100% of
§1504(a)(4)
stock
L1
50%
50%
FMVs-
L2
L common stock: $100
L1 common stock: $ 40
L1 preferred stock: $ 30