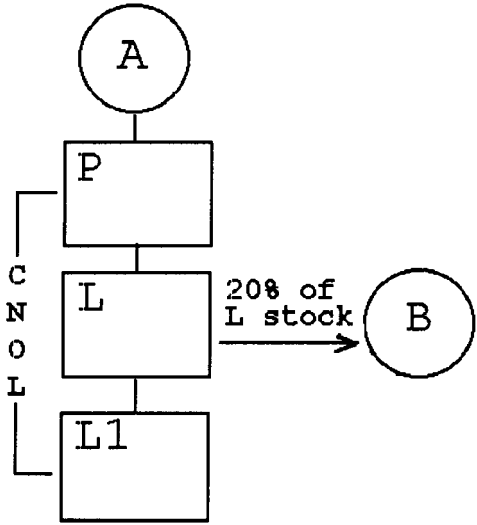
A
P
C
N
O
L
L
20% of
L stock
B
L1

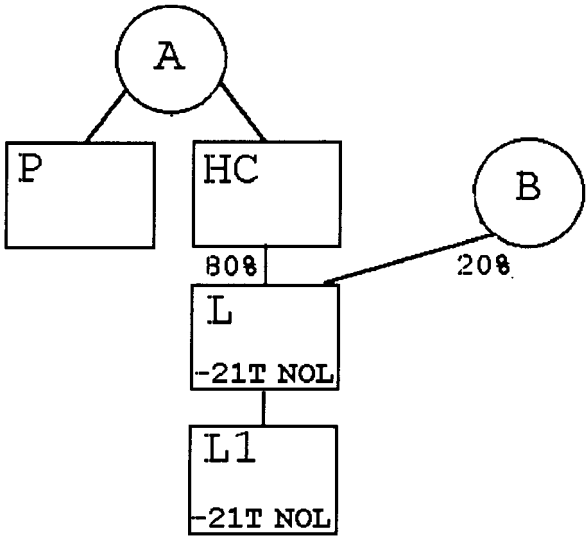
A
P
HC
B
80%
20%
L
-21T NOL
L1
-21T NOL