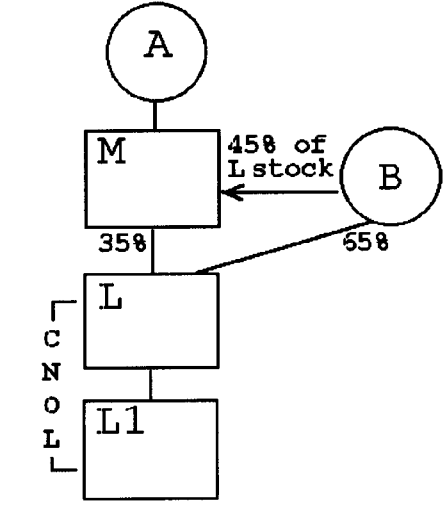
A
M
45% of
L stock
B
35%
65%
L
CNOL
L1

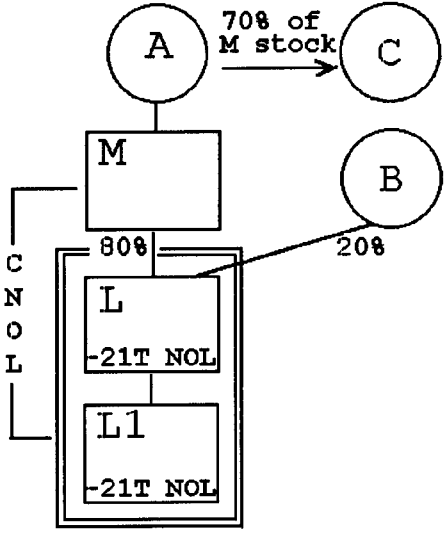
A
70% of
M stock
C
M
B
80%
20%
CNOL
L
-21T NOL
L1
-21T NOL