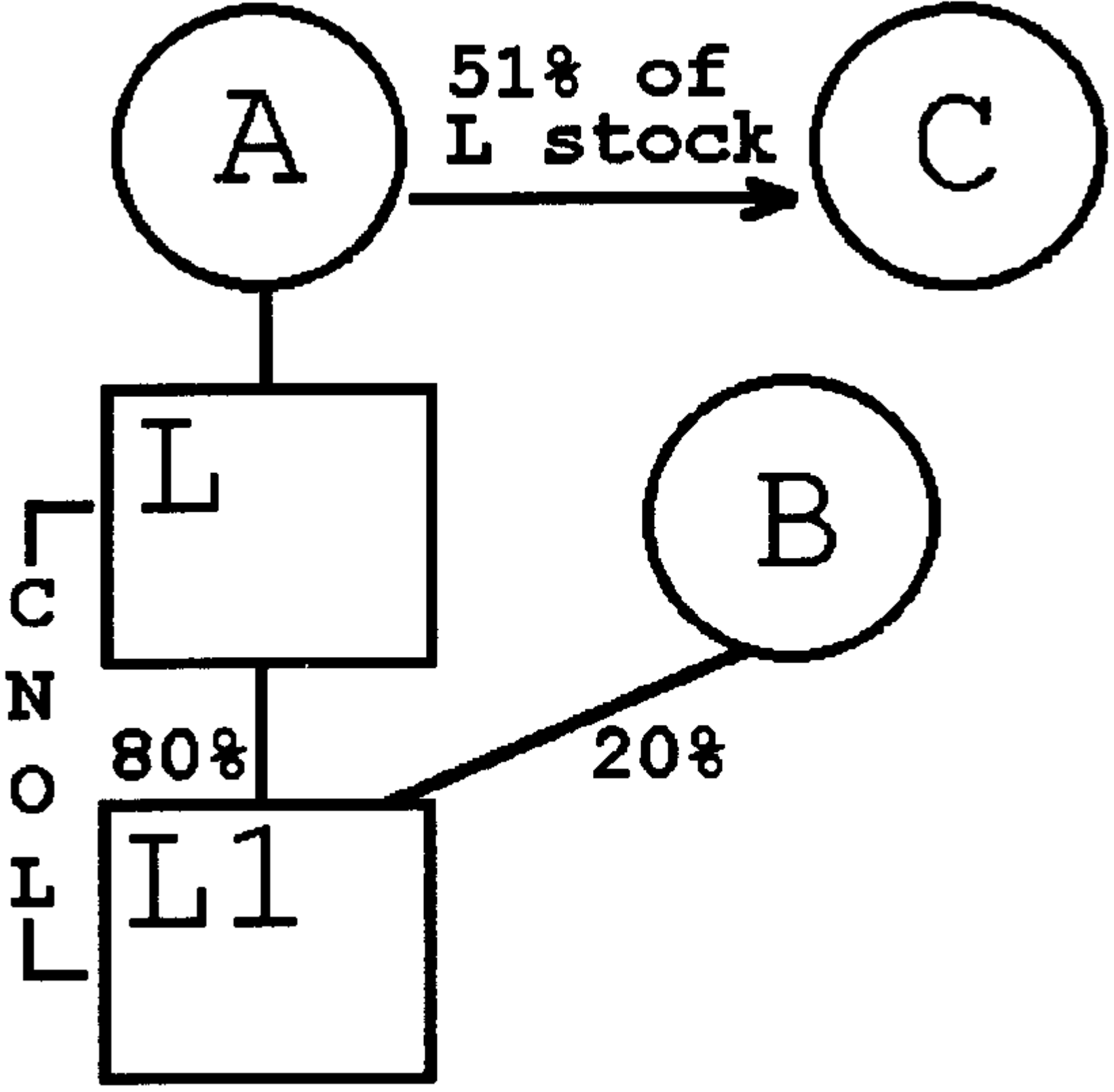
A
51% of
L stock
C
L
B
CONTROL
80%
20%
L1