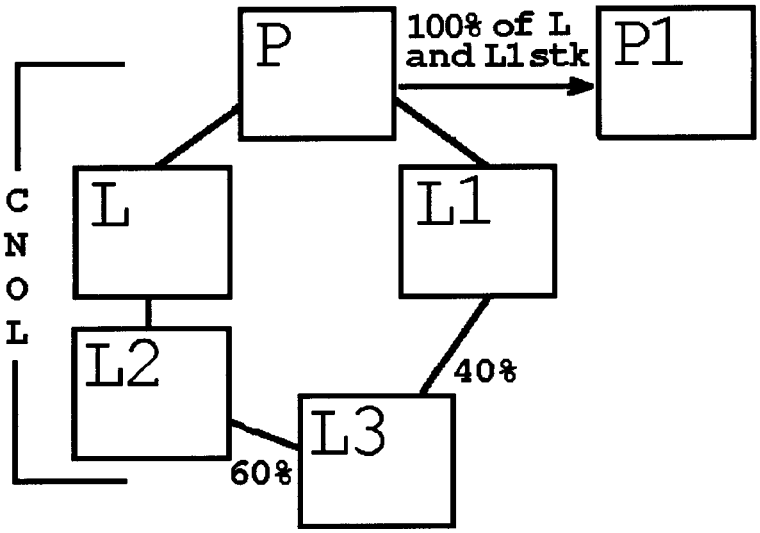
P
100% of L
and L1 stk
P1
CNOL
L
L1
L2
40%
L3
60%

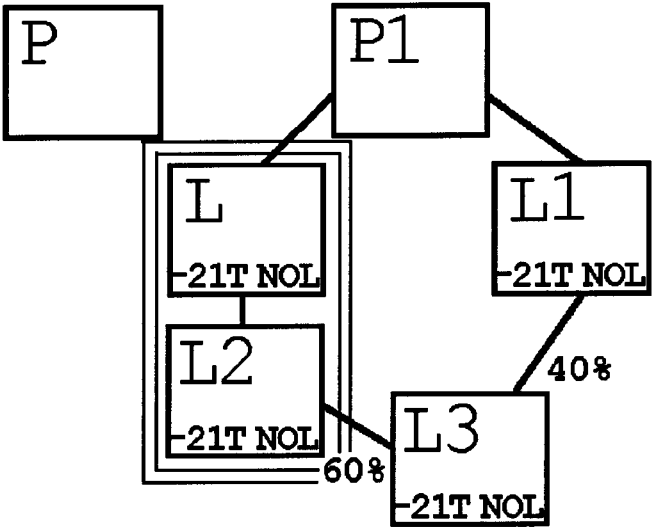
P
P1
L
21T NOL
L1
21T NOL
L2
21T NOL
40%
L3
21T NOL
60%