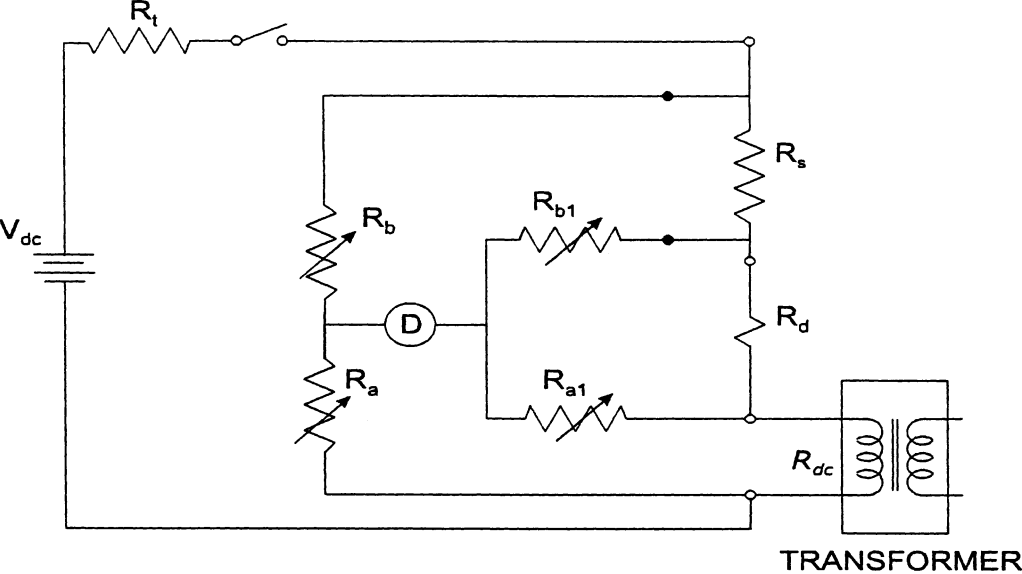

Figure 3.2 Kelvin Bridge