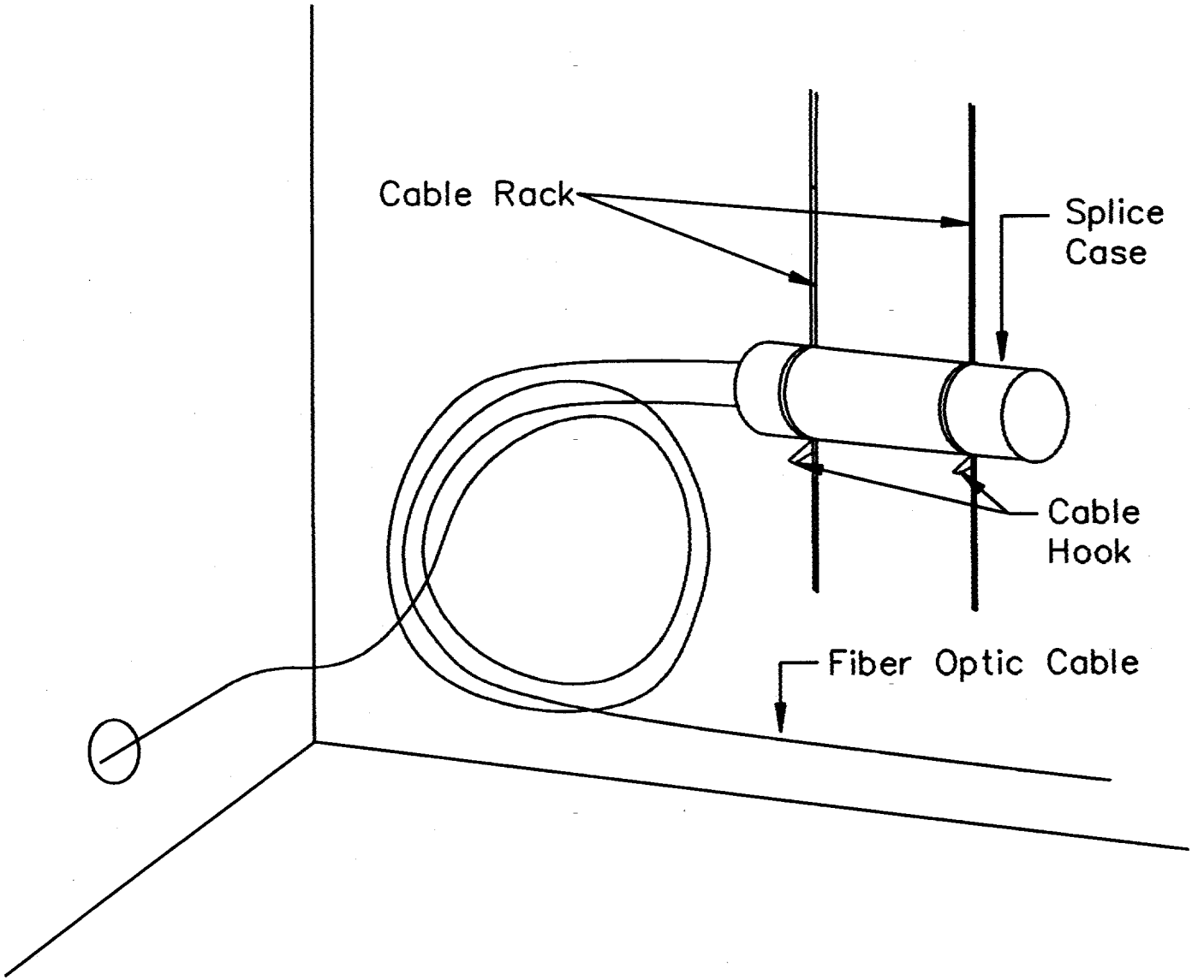FIGURE 12
MANHOLE SPLICE STORAGE