FIGURE 11
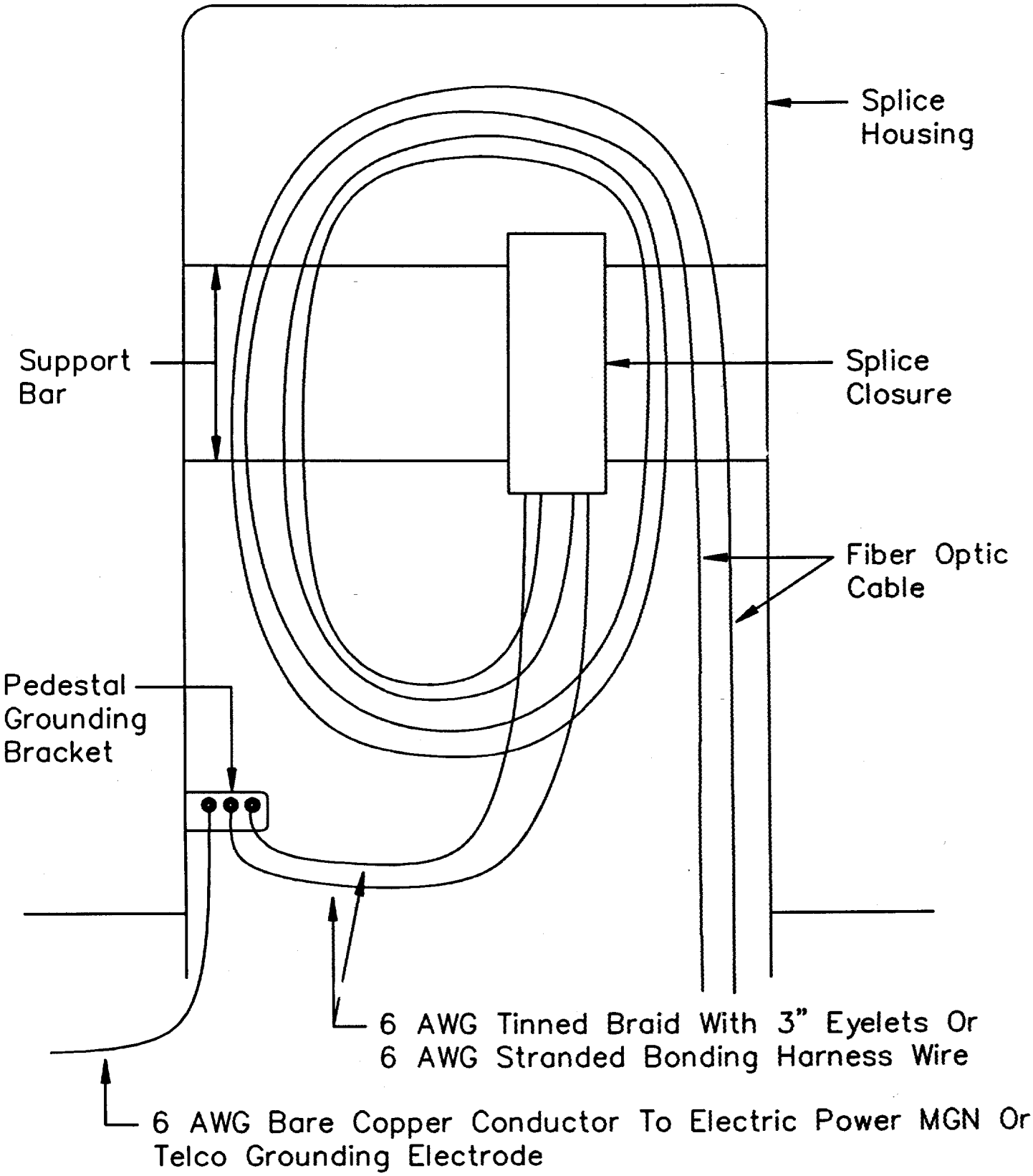
BURIED SPLICE STORED INSIDE PEDESTAL HOUSING