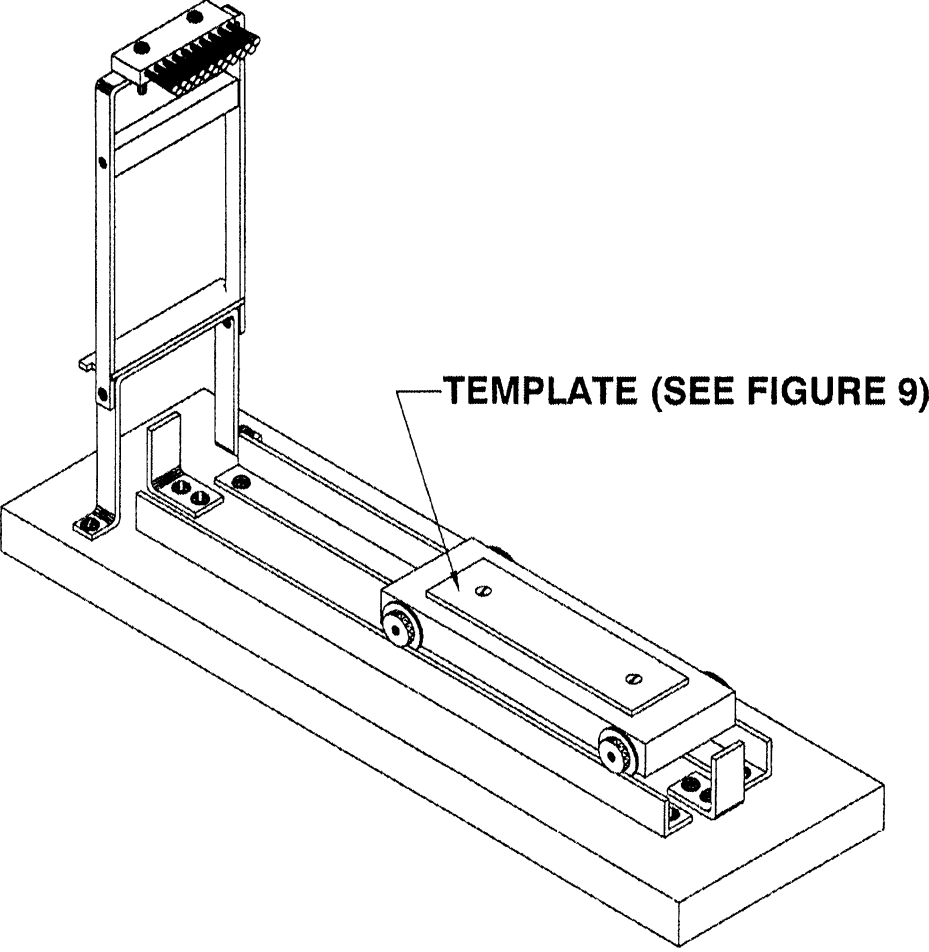

BRUSHING DEVICE
FIGURE 7