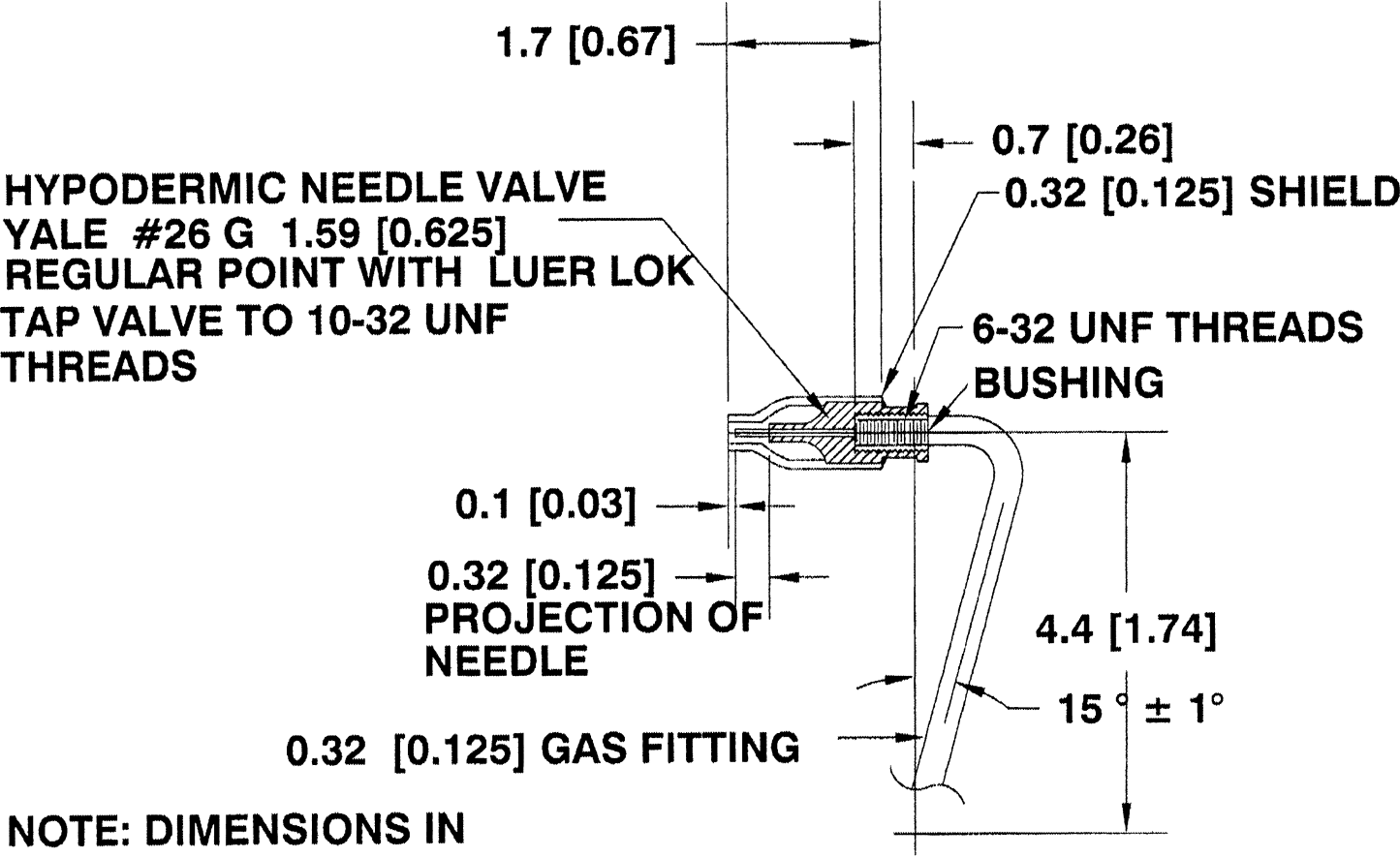

NOTE: DIMENSIONS IN
CENTIMETERS [INCHES]
TOLERANCE ± 0.05 [0.019]
UNLESS OTHERWISE NOTED

IGNITER
FIGURE 6