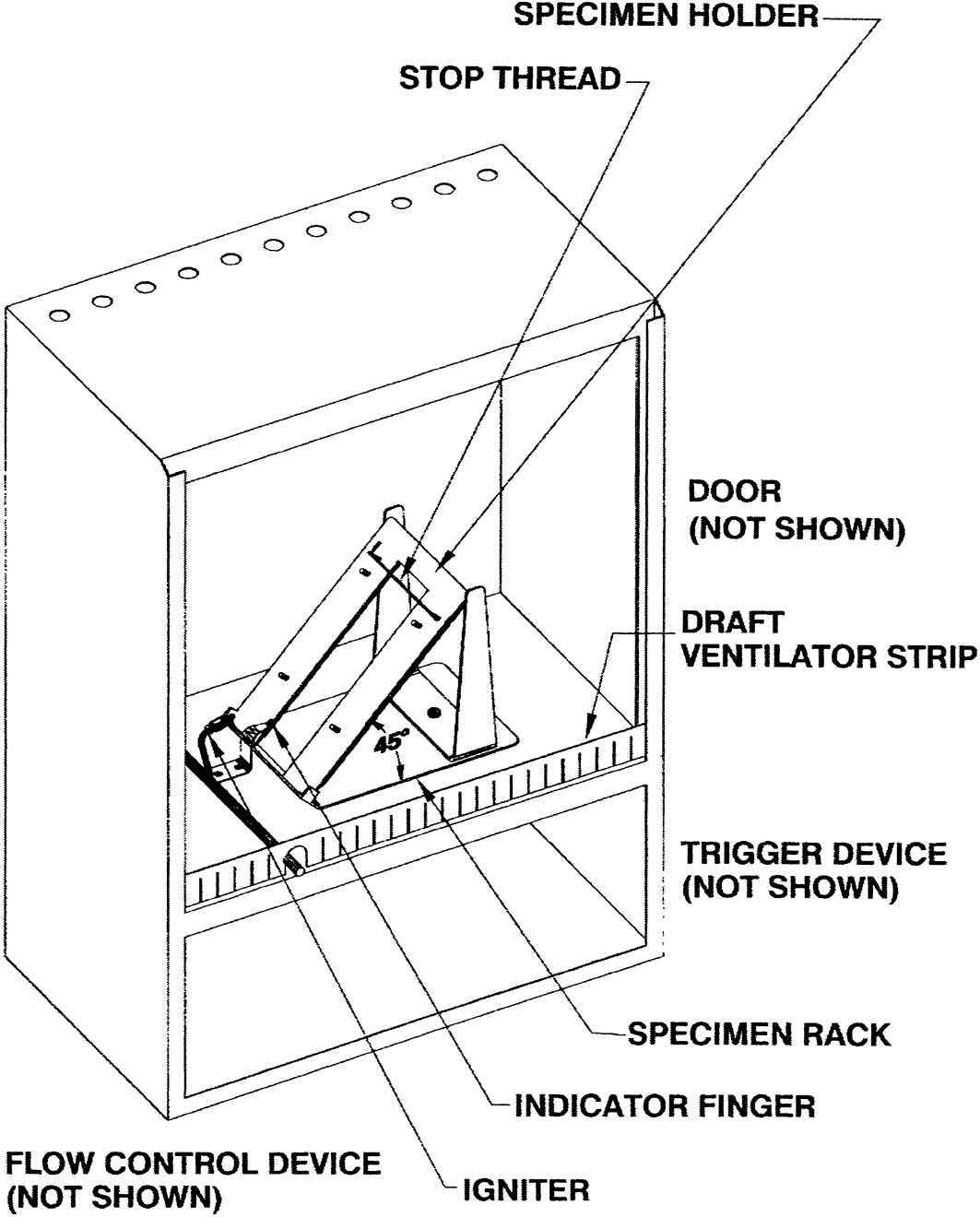


SKETCH OF FLAMMABILITY APPARATUS

FIGURE 1