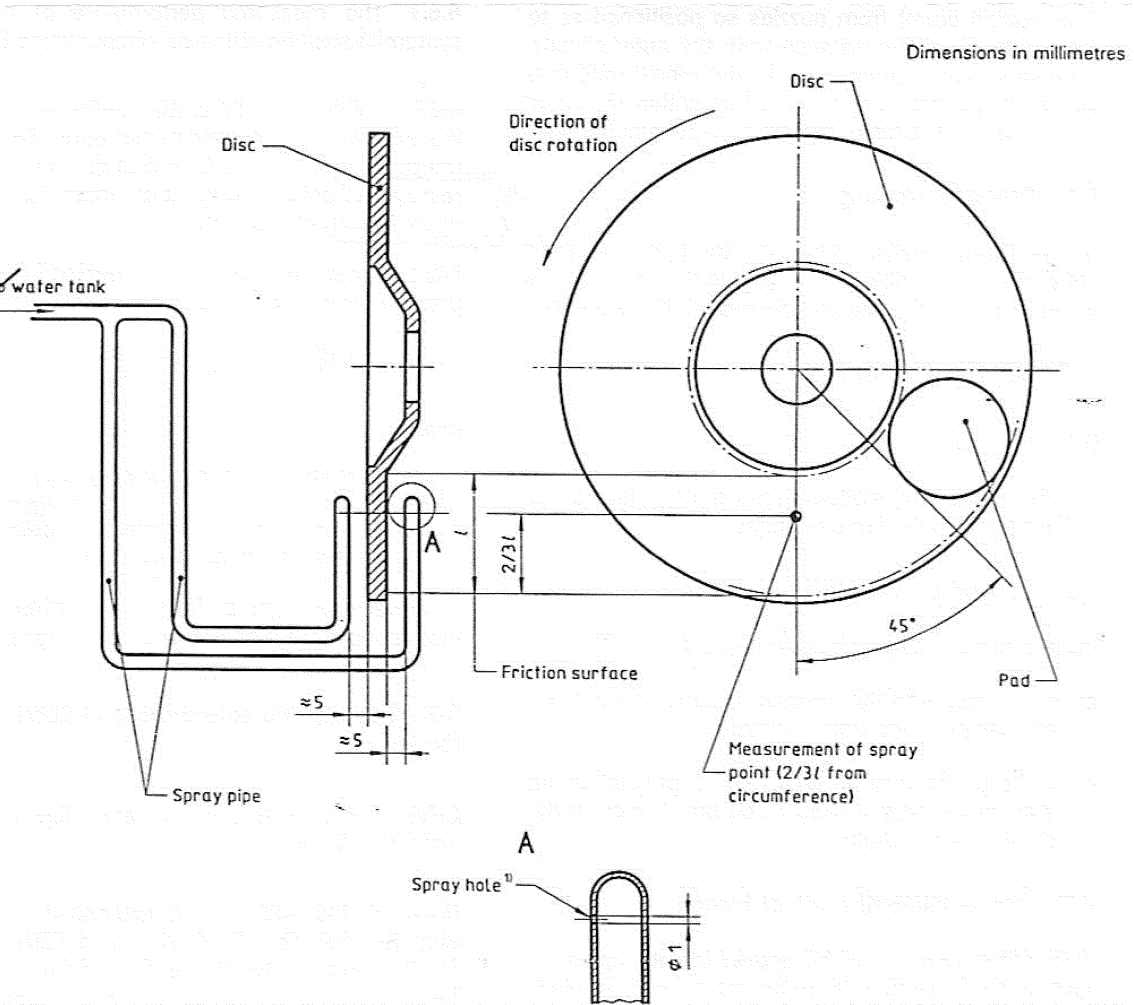Figure 3. Wet brake test.