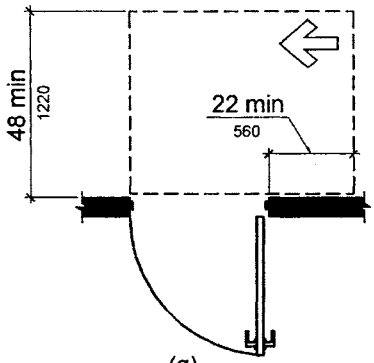

(g)
hinge approach, push side, door provided with both closer and latch

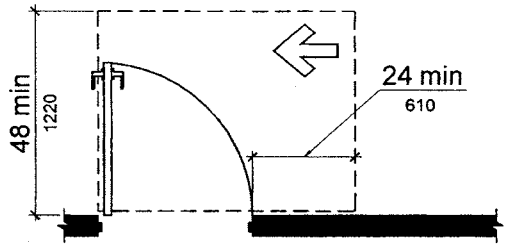

(h)
latch approach, pull side

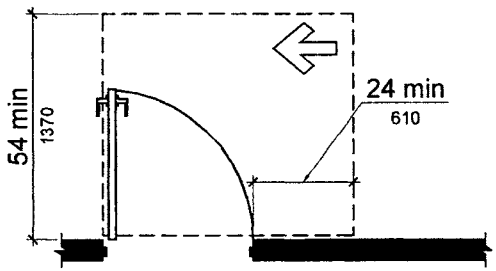

(i)
latch approach, pull side, door provided with closer

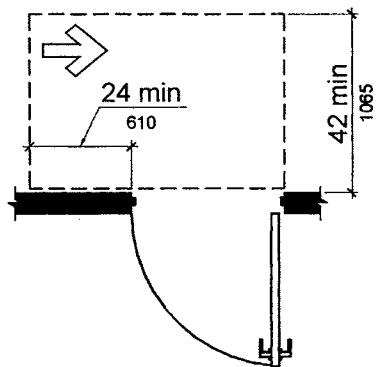

(j)
latch approach, push side

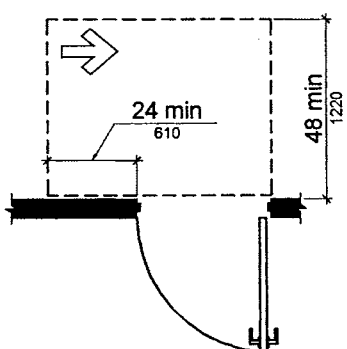

(k)
latch approach, push side, door provided with closer

Figure 404.2.4.1
Maneuvering Clearances at Manual Swinging Doors and Gates