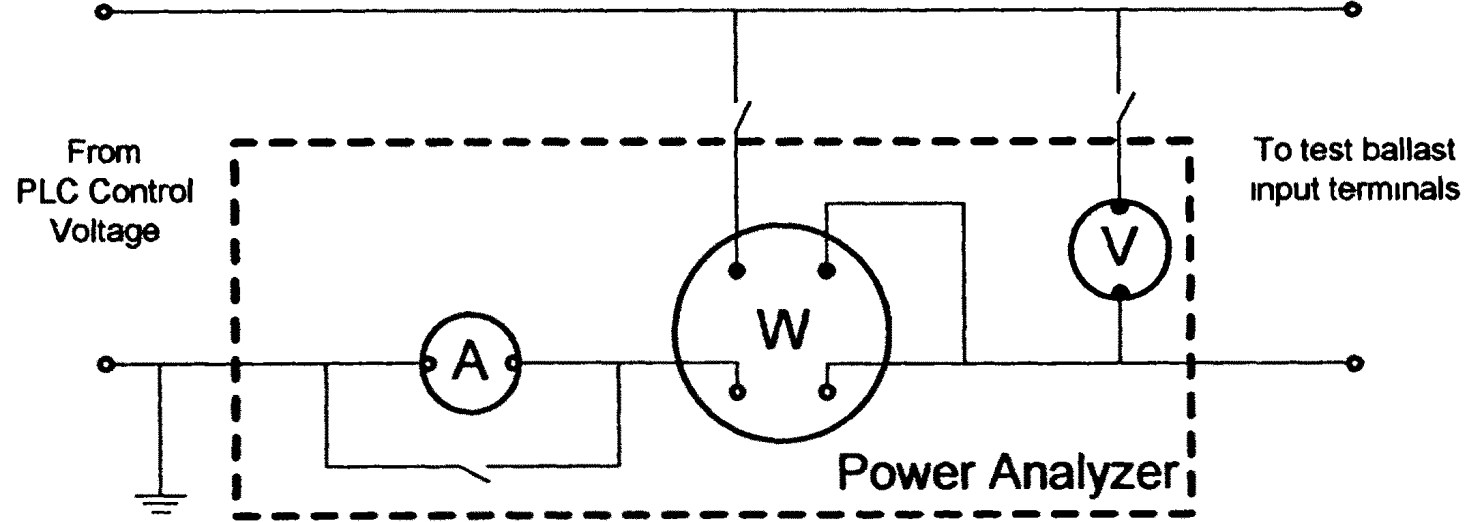

Figure 3: Circuit for Measuring PLC Control Signal Power in Standby Mode