Figure P5
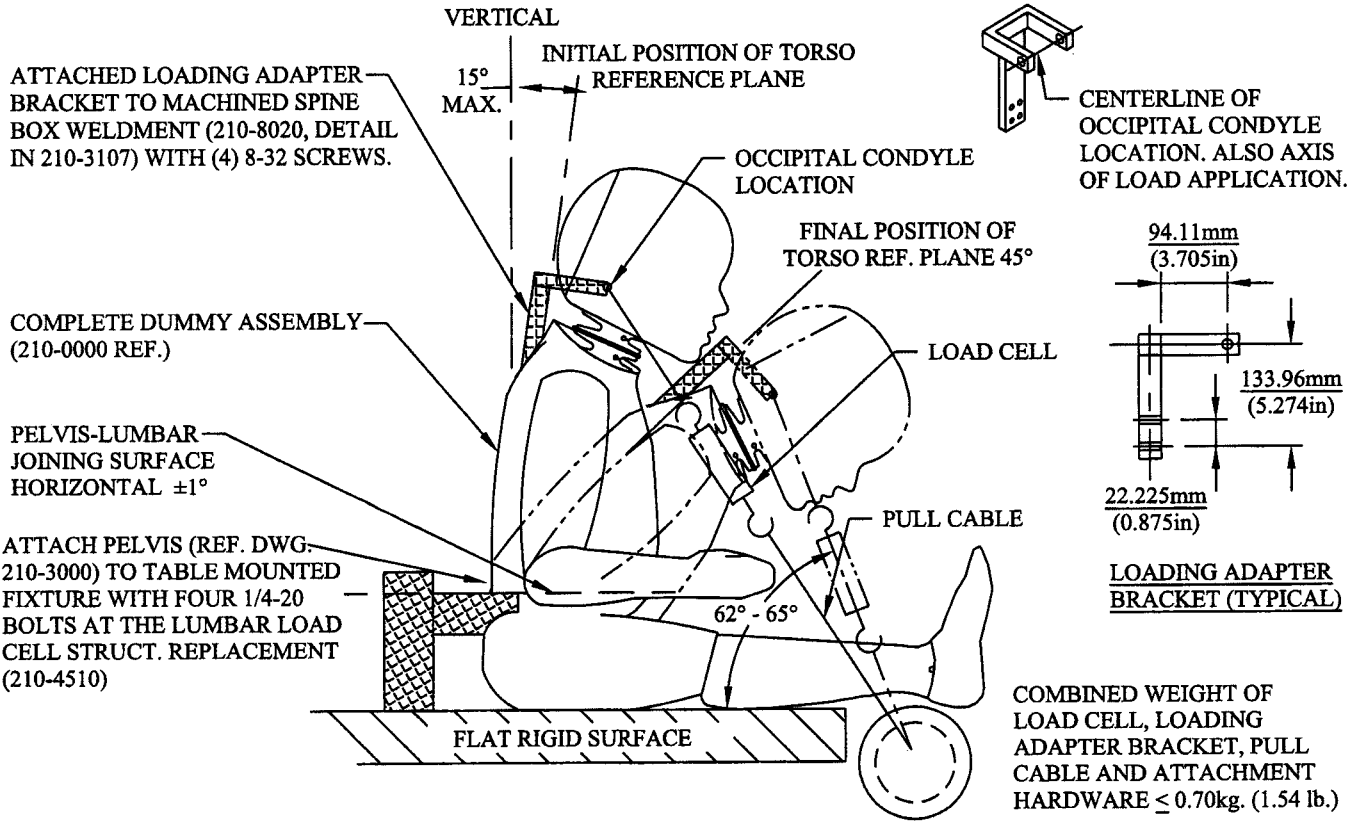
TORSO FLEXION TEST SET-UP SPECIFICATION