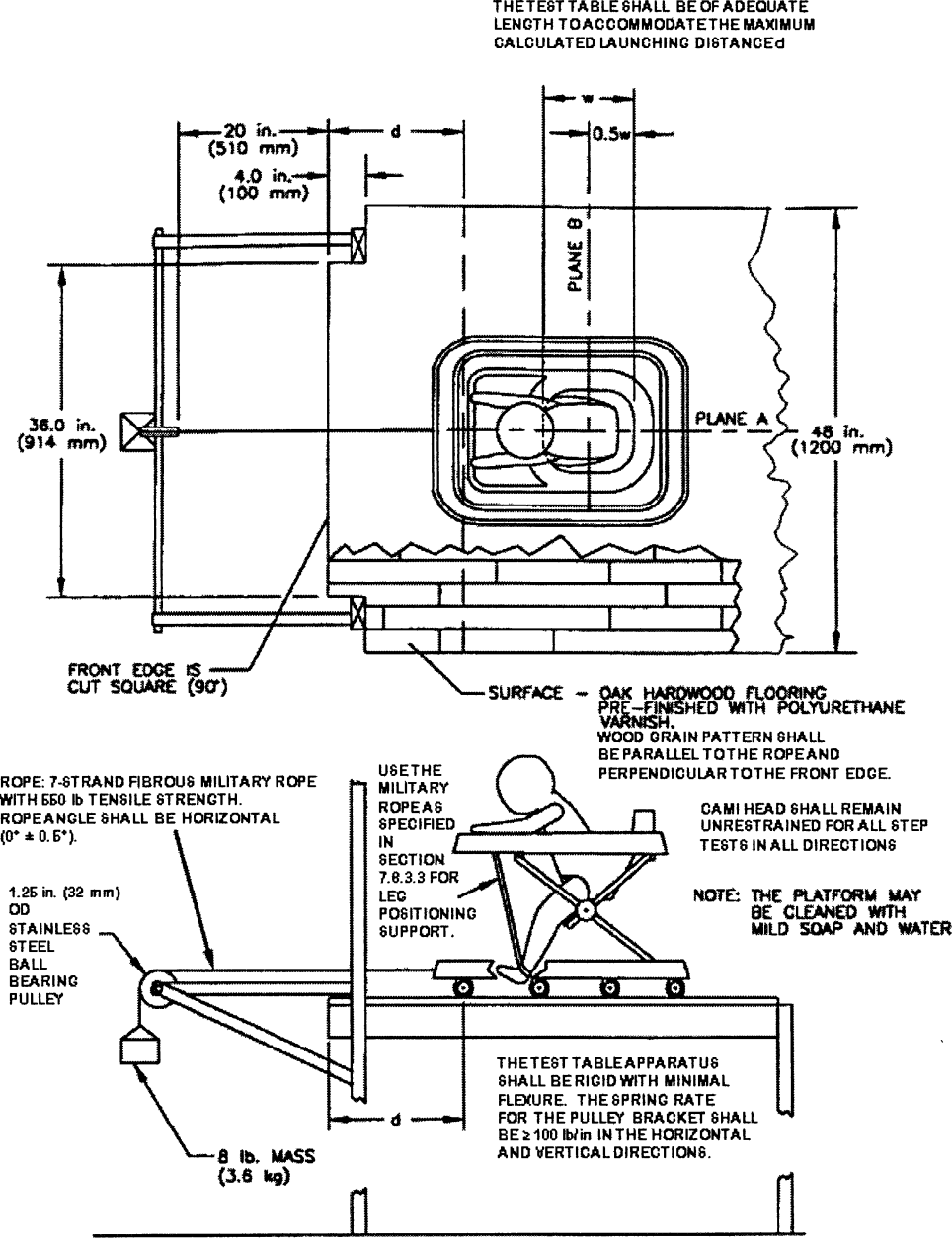

Figure 10 Test Platform Specifications