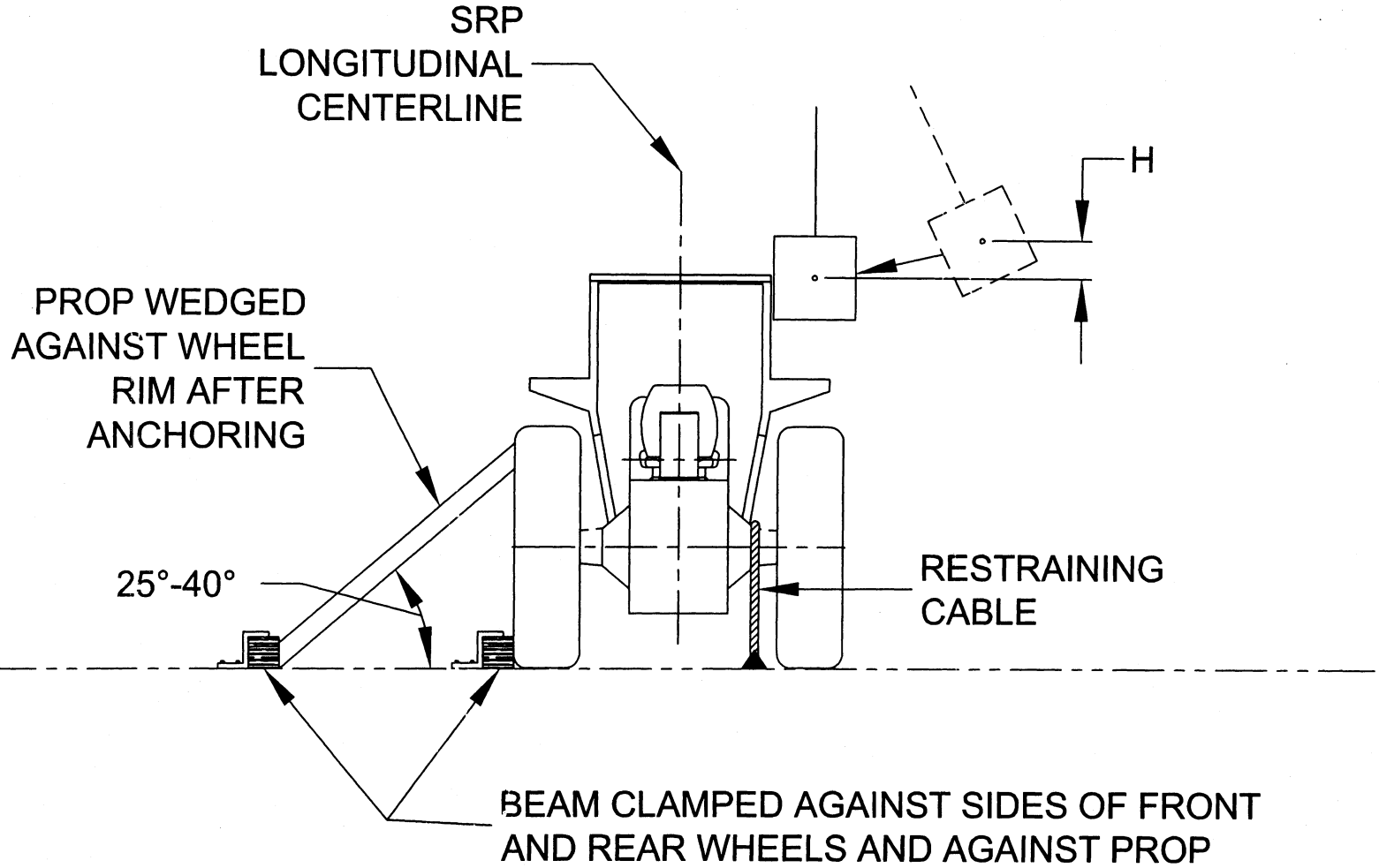

FIGURE C-16 - SIDE IMPACT APPLICATION.