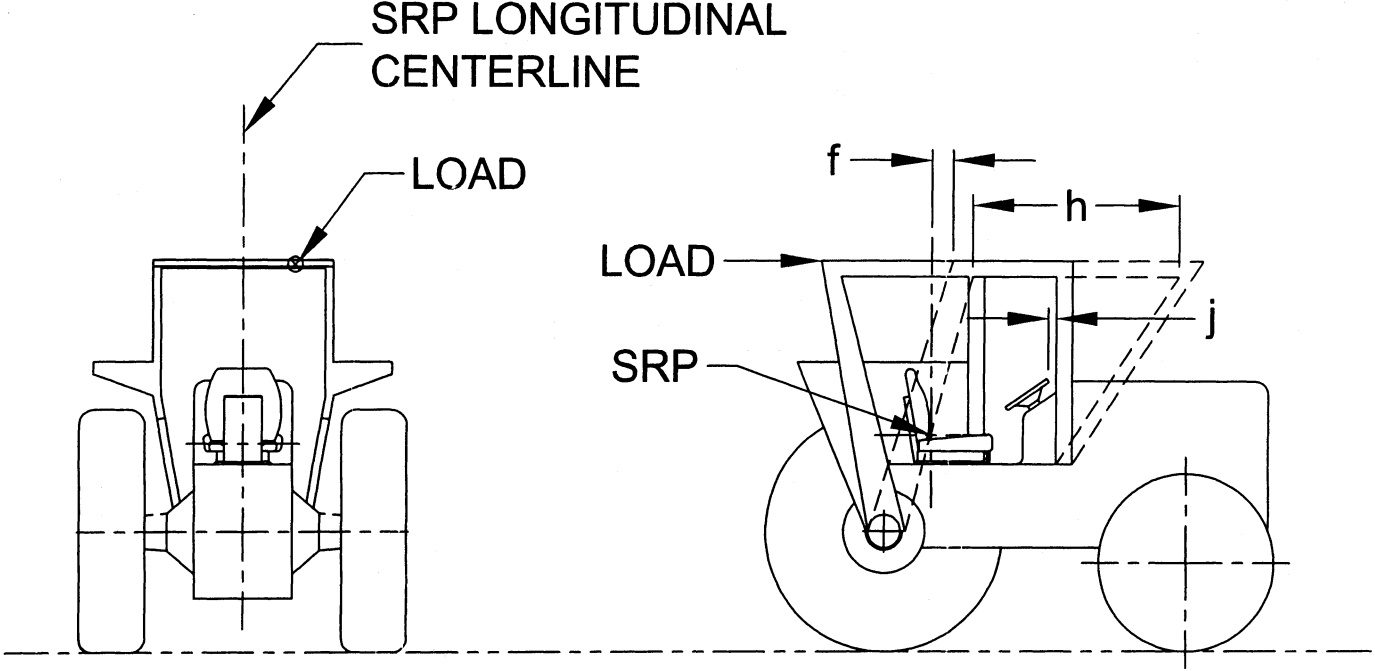

FIGURE C-14 - REAR LOAD APPLICATION.