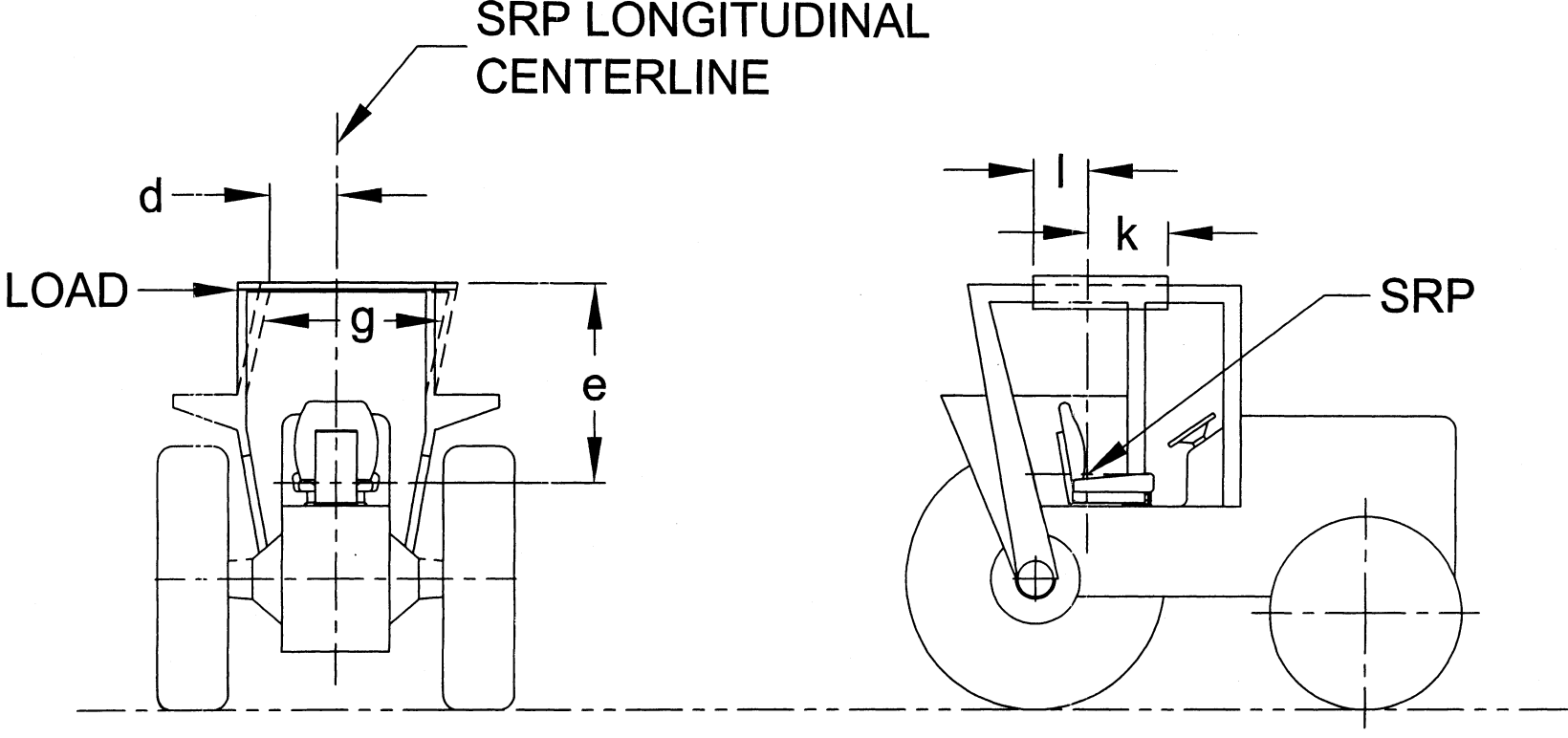

FIGURE C-13 - SIDE LOAD APPLICATION.