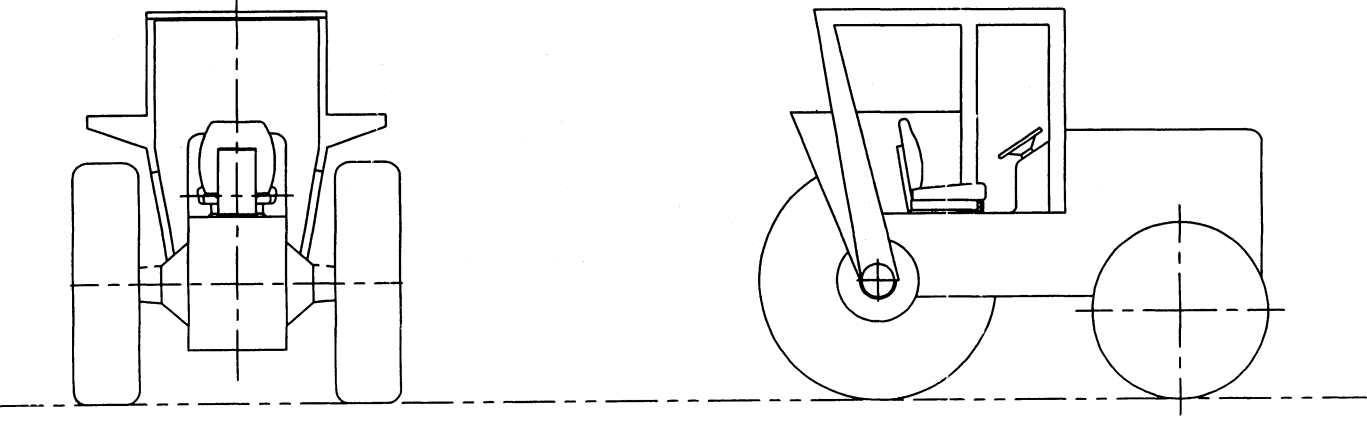

FIGURE C-12 - TRACTOR WITH TYPICAL PROTECTIVE ENCLOSURE.